CITY OF KINGSPORT CONSTRUCTION SPECIFICATIONS

Revised 07/2011

CITY OF KINGSPORT
CONSTRUCTION SPECIFICATIONS
TABLE OF CONTENTS

SECTION	DESCRIPTION	PAGES
01 11 13	General Information	2
01 22 00	Measurements & Payments for Pipe Replacement	3
01 29 73	Schedule of Values	2
01 31 19	Project Meetings	1
01 32 16	Project Schedules	2
01 33 00	Submittal Procedures	3
01 42 00	Reference Standards	2
01 45 00	Quality Control	2
01 45 23	Inspections and Tests for Pipe Replacement	7
01 50 00	Construction Facilities and Temporary Controls	2
01 53 26	Bypass Pumping	2
01 55 00	Traffic Regulation	3
01 60 00	Material and Equipment	2
01 70 00	Contract Closeout	2
01 71 23	Field Engineering	2
01 80 00	Special Conditions	3
02 01 00	Traffic, Property, & Utility Maintenance and Coordination	6
02 41 00	Demolition	2
03 30 00	Concrete Work	20
03 40 00	Precast Concrete	4
05 56 00	Metal Castings	3
26 05 00	Electrical Work	16
26 05 10	Electrical - Basic Materials and Methods	10
26 56 19	Highway Lighting	6
27 00 00	Communications	6
31 11 00	Clearing and Grubbing	4
31 22 00	Grading and Excavating	5
31 22 16	Base and Sub grade Treatment	10
31 23 33	Trenching, Backfilling and Compaction	23
31 25 13	Soil & Erosion Control	4
31 25 23	Rip-Rap	6
31 74 24	Tunnel - Steel Liner Plate	3
32 12 16	Asphaltic Concrete Paving	21
32 13 13	Portland Cement Concrete Paving	13
32 16 13	Concrete Sidewalks, Curbs and Gutters	9
32 17 23	Pavement Marking	2

32 31 13	Chain link Fences and Gates	3
32 91 19	Topsoil	3
32 92 19	Lawn and Grass Landscaping, Temporary Seeding	5
32 92 20	Lawn and Grass Landscaping, Permanent Seeding	13
32 92 23	Sodding	3
33 01 30	Cured-in-place Pipe	10
33 01 33	Sanitary Sewer Rehabilitation – Pipe Bursting	6
33 05 10	Separation of Piped Utilities and Stream Crossings	5
33 05 13	Sewer Manhole Rehabilitation	6
33 05 15	Pipe Joints, Fittings, and Appurtenances	4
33 05 23	Boring and Jacking	3
33 11 00	Water Distribution Systems	13
33 30 00	Sanitary Sewerage Systems	20
33 32 00	Sanitary Sewer Pump Stations	9
33 32 10	Wet Well Mounted Duplex Pump Station	8
33 32 20	Simplex Residential Pump Station	4
33 32 22	Duplex Residential Pump Station	4
33 32 24	Duplex Pump Station	5
33 32 30	Air Scrubber	4
33 40 00	Storm Drainage Systems	6
34 41 00	Highway Signs	2
34 71 13	Guardrails	3

CITY OF KINGSPORT
CONSTRUCTION SPECIFICATIONS
DRAWINGS AND ADDITIONAL INFORMATION

DESCRIPTION	PAGE
General Notes	A1.1
Sanitary Sewer Details	
Air Release Valve	A2.1
Concrete Anchors & Collars	A2.2
Check Dam	A2.3
Gravity Sewer in Casing	A2.4
PVC Bedding; Concrete Encasement	A2.5
Drop Manhole Connection	A2.6
Flush Cleanout & Service Line Detail	A2.7
Connection to Existing Force Main in Tunnel Access Vault	A2.8
Trench Detail (Force Main & Gravity Sewer in Same Trench)	A2.9
Inside Drop Connection	A2.10
Typical Invert Plan	A2.11
4’ Diameter Precast Concrete Manhole	A2.12
Creek Crossing and Earth Fill Over Sewer Pipe	A2.13
4’ Depth Shallow Manhole	A2.14
Force Main Connection in Manhole	A2.15
Concrete Thrust Blocking for Force Mains	A2.16
Type A Cast Iron Manhole Frame & Cover	A2.17
Type B Cast Iron Manhole Frame & Cover (Watertight)	A2.18
Manhole Vent Detail for Watertight Manholes	A2.19
Sewer Replacement Details	
Crossing Pipe Cradle	A3.1
Concrete Pipe to Cast Iron Pipe Adapter	A3.2
Pavement Transition Detail	A3.3
Standard Cleanout Detail	A3.4
Rock and Pavement Measurement	A3.5
Manhole Sizing Table	A3.6
Manhole Invert Shaping	A3.7
Manhole Step	A3.8
Sewer Lateral Connections	A3.9
Sewer Lateral Connections – Future	A3.10
End Plugging Abandoned Sewer Line	A3.11
Plugging Abandoned Sewer Line at Manhole	A3.12
Plugging Abandoned Service Lateral at Main Line	A3.13
Trench Detail for Gravity Pipes	A3.14
Air Test Sketch	A3.15

Water Line Details

2” Wet Tap Detail	A4.1
Blowoff at Dead End Water Mains	A4.2
Casing Spacer for Centered/Restrained Waterline	A4.3
Fire Hydrant Detail	A4.4
Pressure Reducing Valve & Vault, 2” Waterline	A4.5
Pressure Reducing Valve & Vault, 3” and Larger Waterlines	A4.6
Reducing 6”& Larger Waterline to 2”	A4.7
Restrained Joint Details	A4.8
Service Lines	A4.9
Service Lines for 2” Meters	A4.10
Air Release Valve & Vault in Soil	A4.11
Air Release Valve & Vault in Street	A4.12
Tapping Valve & Sleeve	A4.13
Type A Cast Iron Frame & Cover for Air Release Valve in Street or Paved Area	A4.14
Valve Box Setting	A4.15
Creek Crossings	A4.16
Concrete Thrust Blocking	A4.17
Temporary Testing and Flushing Connection to Existing Fire Hydrant	A4.18
Temporary Testing and Flushing Connection to Existing Waterline	A4.19
Automatic Flushing Device	A4.20

Storm Drainage Details

Curb Type Catch Basin Frame and Grate	A5.1
Flat Type Catch Basin Frame and Grate	A5.2
Storm Sewer Manhole	A5.3
Shallow Storm Sewer Manhole	A5.4
Storm Sewer Catch Basin	A5.5

Street Details

Typical Alley Cross Section	A6.1
Typical Street Cross Section	A6.2
Typical Commercial Street Cross Section	A6.3
Curb & Gutter Details	A6.4
Drop Header at Alley Entrance	A6.5
Typical Driveway Entrance	A6.6
Requirements for Open Cut Trenching, Backfilling and Replacement	A6.7

Sidewalk Details

Sidewalk Plan ‘A’	A7.1
Sidewalk Plan ‘B’	A7.2
ADA Compliant Sidewalk Ramp	A7.3
Brick Pavers Design ‘A’	A7.4
Brick Pavers Design ‘B’	A7.5
Brick Pavers Design ‘C’	A7.6

CITY OF KINGSPORT
CONSTRUCTION SPECIFICATIONS
REVISION HISTORY

June 2008

1. Merge from document "City of Kingsport Engineering Specifications: Pipe Replacement Specifications," which is no longer used.
2. Update section numbering to match MasterFormat 2004.
3. Add Sections 01 11 13, 01 22 00, 01 29 73, 01 31 19, 01 32 16, 01 33 00, 01 42 00, 01 45 00, 01 45 23, 01 50 00, 01 53 26, 01 55 00, 01 60 00, 01 70 00, 01 71 23, 01 80 00, 02 01 00, 03 40 00, 05 56 00, 33 05 15, 33 05 13.
4. General formatting.
5. Section 02 41 00: Added Paragraph 3.01.C.
6. Section 31 23 33: Added Sections 1.03 – 1.06; 309; 3.16 – 3.17.
7. Section 33 11 00: Added Paragraph 1.01.G
8. Section 33 30 00, Paragraph 3.15.A.4: Add cast iron cleanout box.
9. Add "or his agent" to "City Engineer".
10. Revise Section 31 22 00, 31 25 13, 32 92 20, 32 92 23, 33 40 00.
11. Section 26 56 19: Revise Paragraph 2.09.B
12. Add Automatic Flushing Device Drawing.
13. Remove Traffic Control Drawings.

July 2011

1. Revise Drawing A7.3
2. Update Chart on 03 30 00-12 to reflect correct rebar sizes.
3. Section 33 01 30: PACP certification requirement.
4. Section 33 01 33: Add paragraph 1.03.5; PACP certification requirement.
5. Section 33 30 00: Revise Paragraph 3.15.4
6. Revise Drawing A3.4, A2.7, A3.10
7. Revise Drawing A4.3, A4.10, A4.11, A4.12, A4.16, A4.17

SECTION 01 11 13

GENERAL INFORMATION

PART 1 GENERAL

1.01 WORK INCLUDED

A. Any work performed for the City of Kingsport and any work within the City of Kingsport right-of-way and/or any other property.

1.02 CONTRACT METHOD

A. The Owner reserves the right to award other contracts for additional work in connection with this project as required to install improvements and to equip the project. The Owner reserves the right to deduct work from the Contract.

1.03 WORK SEQUENCE

A. Construct work in stages to accommodate Owner's use of premises during construction. Coordinate with Progress Schedule.

B. Required stages:

1. Install erosion and sediment control items prior to beginning any land disturbing activities.

C. Construct Work in stages to provide for continuous public usage. Do not close off public usage of facilities until use of one stage of Work provides alternate usage.

1.04 CONTRACTOR USE OF PREMISES

A. Contractor shall limit use of premises for Work, storage and access, to allow:

1. Owner occupancy.
2. Work by other contractors.
3. Public usage.

B. Coordinate use of premises under direction of Owner.

C. Assume full responsibility for protection and safekeeping of products under the Contract.

D. Obtain and pay for use of additional storage or work areas needed for operations under the Contract.

1.05 REQUEST FOR INFORMATION

A. Any questions, clarifications or interpretations requested by the Contractor shall be submitted in writing. Requests for Information (RFIs) shall be numbered sequentially, and be filled in completely. Form and all required additional information shall be delivered to the City Engineer or his agent. Responses will be on the form.

1.06 WARRANTY OF TITLE

A. No material, supplies, or equipment to be installed or furnished under the Contract shall be purchased subject to any chattel mortgage or under a conditional sale, lease purchase or other agreement by which an interest therein or in any part thereof is retained by the seller or supplier. The Contract shall warrant good title to all materials, supplies, and equipment installed or incorporated in the work and upon completion of all work, shall deliver the same together with all improvements and appurtenance constructed or placed thereon by the Contractor to the Owner free from any claims, liens, or charges. Neither the Contractor nor any person, firm, or corporation furnishing any material or labor for any work covered by the Contract shall have any right to a lien upon any improvement or appearance thereon. Nothing contained in this paragraph, however, shall defeat or impair the right of persons furnishing materials or labor to recover under any bond given by the Contractor for their protection or any rights under any law permitting such persons to look to funds due to the Contractor in the hands of the Owner. The provisions of this paragraph shall be inserted in all subcontracts and material contracts, and notice of its provisions shall be given to all persons furnishing materials for the work when no formal contract is entered into for such materials.

1.07 GENERAL GUARANTEE

A. Neither the final certificate of payment nor any provision in the Contract nor partial or entire use of the improvements embraced in the Contract by the Owner or the public shall constitute an acceptance of work not done in accordance with the Contract or relieve the Contractor of liability in respect to any express warranties or responsibility for faulty materials or workmanship. The Contractor shall promptly remedy any defects in the work and pay for any damage to other work resulting therefrom, which shall appear within a period of twelve months from the date of final acceptance of the Work. The Owner shall give notice of defective materials and work with reasonable promptness.

END OF SECTION

SECTION 01 22 00

MEASUREMENTS AND PAYMENTS FOR PIPE REPLACEMENTS

PART 1 GENERAL

1.01 BASIS

A. All work shall be paid on the basis of the Unit Prices stated in the Bid Form and upon the actual work performed and materials installed, complete-in-place, in accordance with the Contract Documents. No separate payment shall be made for such items as the constant maintenance and coordination of the work, utility excavation, excavation, trench protection, utility support and coordination, traffic control, sheeting and shoring, underpinning, installation procedure, maintaining drainage flow, maintaining sewage flow, dewatering, utility backfill, backfill, pavement sawcutting, cutting and removal, inspection, testing and restoration except when specified otherwise. The expense for these and any other incidental or related work necessary to provide and install a Bid Item, complete-in-place, shall be included in the Unit Price for that particular Bid Item. All work indicated or implied for a complete and finished installation shall be included in one of the several unit prices. The actual quantities shall be verified by the City Engineer or his agent.

PART 2 PRODUCTS

(NOT APPLICABLE)

PART 3 EXECUTION

3.01 MEASUREMENTS AND PAYMENTS

A. Sewer Line: shall be measured and paid per lineal foot, for each size of pipe specified or indicated, according to the type of material and installation method indicated. Measurements shall be made of the actual horizontal length from center of manhole to center of manhole, or from center of manhole through cleanout, installed complete-in-place. The lineal foot price shall include all labor, equipment and materials for excavation; backfill; pipe; fittings; check dams; improved bedding; compaction; removal of existing pipe, laterals and manholes; abandonment of existing pipe, manholes and laterals indicated on the drawings, including where removal is indicated within a structure; plugging of existing pipes and laterals; connections of pipes of different materials and different sizes; testing; miscellaneous concrete required in accordance with the details; pavement and concrete for roads, driveways, and sidewalks in accordance with Supplementary Drawing MCM-12K; all work required in making the connections to the existing system; and any other work necessary to make a complete working sanitary sewer system. The measurement for sewer line shall also include carrier pipe within casing pipe.

B. Manholes - New: shall be paid for at the unit price bid. The price bid shall include all equipment, labor and materials for sheeting and shoring, excavation, backfill, bedding material, concrete road patch, flexible connection, spacer rings, invert shaping, pipe installations, joint materials, boots, testing, steps, frame and cover, and drop connection special construction techniques, and any other item required for a complete installation.

C. Sanitary Sewer Frames and Covers: shall be paid for in the price for manholes.

D. Sanitary Sewer Drop Connections: shall be paid for in the price for manholes.

E. Sewer Service Laterals (Dig & Replace and Pipe Bursting): shall be paid for at the unit price bid per lateral from the connection fitting at the mainline to the proposed cleanout at the property line or where directed by City Engineer or his agent, complete-in-place, including all labor, equipment and materials for a complete installation including pipe, excavation, backfill, bedding, fittings, pipe connection adapter, concrete, removal of existing pipe, restoration and any other work incidental or required for a complete, working installation. Cleanouts are included in this bid item as specified on the bid form.

F. Sewer Service Laterals (with cleanout by CIPP): shall be paid for at the unit price bid per lateral from the mainline to the proposed cleanout at the property line or where directed by the City Engineer or his agent, up to 50 lf from the mainline. Lateral shall be complete-in-place, including all labor, equipment and materials for a complete installation including pipe, excavation, backfill, bedding, fittings, pipe connection adapter, concrete, removal of existing pipe, restoration and any other work incidental or required for a complete, working installation. Cleanouts are included in this bid item as specified on the bid form.

G. Excess Asphalt Pavement Replacement: shall be measured and paid per square yard for the pavement specified, and shall include all labor, equipment and materials required, complete-in-place, including the expense for raising or reworking any utility covers and for filling any existing holes and depressions under the new pavement. This item covers pavement beyond the areas required for utility replacement as indicated in Supplementary Drawing A3.5.

H. Excess Concrete Pavement Replacement: shall be measured and paid per square yard, complete in place, and shall include all labor, equipment, and materials for subgrade preparation, base course, concrete reinforcement, surface finishing, testing, curing, joints and any other work necessary for a complete pavement installation. This item covers pavement beyond the areas required for utility replacement as indicated in Supplementary Drawing A3.5.

I. Seeding: shall be paid for as part of the lineal foot price bid for the associated sewer line and sewer service laterals.

J. Erosion Control: shall be paid for as part of the unit price bid for the sewer line and sewer service laterals. This item shall include ditch protection. No separate payment shall be made.

K. Concrete Curb and Gutter: shall be paid for at in the unit price bid for sewer line or sewer service lateral replacement. No separate payment shall be made.

L. Concrete Entrances and Driveways: shall be paid for at the unit price bid for sewer line or sewer service laterals. No separate payment shall be made.

M. Concrete Sidewalk: shall be paid for at the unit price bid for sewer line or sewer service laterals. No separate payment shall be made.

N. Restoration: shall be paid for as part of the lineal foot price bid for the associated sewer line or sewer service laterals. No separate payment shall be made.

O. Sewer Line - Pipe Bursting: shall be paid for as described under sewer line.

P. Sewer Line - Dig & Replace: shall be paid for as described under sewer line.

Q. Temporary Pavement for Utility Work: shall be paid for at the unit price bid for sewer line or sewer service laterals. No separate payment shall be made.

R. Crack Sealing: shall be paid for under pavement above. No separate payment shall be made.

S. Manholes - Rehabilitated: shall be paid for at the unit price bid with new frames and covers (standard or watertight as indicated on the plan sheets), complete, including all labor, equipment and materials for cleaning, preparing the surface, the rehabilitation materials, testing, curing, and any other items for a complete rehabilitation.

T. Manhole rainstoppers (stainless steel only) shall be paid for at the unit bid price.

U. Pre and post television inspection of sewer main and laterals shall be paid for as part of the lineal foot price bid for the associated line and sewer service laterals.

END OF SECTION

SECTION 01 29 73

SCHEDULE OF VALUES

PART 1 GENERAL

1.01 WORK INCLUDED

A. Procedures for preparation and submittal of Schedule of Values.

1.02 RELATED WORK

A. Conditions of the Contract.

B. Specified elsewhere:

1. Section 01 32 16: Progress Schedules
2. Section 01 70 00: Contract Closeout

1.03 FORMAT

A. Schedule of Values shall be on approved computer driven Application for Payment Form.

B. The Owner shall approve the Schedule of Values prior to submission of first Application for Payment.

C. Contractor's standard media-driven printout can be submitted for approval.

D. Follow Table of Contents of Specifications for listing component parts. Identify each line item by number and title of major Specifications section.

E. Use items in the Bid Form to establish Schedule of Values.

1.04 CONTENT

A. List installed value of each major item of Work and each subcontracted item of Work as a separate line item to serve as a basis for computing values for Progress Payments. Round off values to nearest dollar.

B. For each major subcontract, list products and operations of that subcontract as separate line items.

C. Include Work allowances, stakeout allowance, and testing allowance as line items of Work, when applicable.

D. Coordinate listings with Progress Schedule.

E. Component listings shall each include a directly proportional amount of Contractor's overhead and profit.

F. For items on which payments are requested for stored products, list sub-values for cost of stored products, including taxes paid.

G. Submit a sub-schedule for each separate stage of Work when specified in Section 01 11 13, Summary of Work.

H. The sum of values listed shall equal total Contract Sum.

1.05 SUBMITTAL

A. Submit three copies of Schedule 15 days prior to first Application for Payment. Form and content shall be acceptable to the City Engineer or his agent.

B. Transmit under transmittal letter. Identify Project by title and number. Identify Contract by number.

1.06 SUBSTANTIATING DATA

A. When the City Engineer or his agent requires substantiating information, submit data justifying line item amounts in question.

B. Provide one copy of data with cover letter for each copy of Application. Show Application number and date, and line item by number and description.

END OF SECTION

SECTION 01 31 19

PROJECT MEETINGS

PART 1 GENERAL

1.01 WORK INCLUDED

A. Contractor participation in preconstruction conferences.

B. Contractor administration of progress meeting.

1.02 RELATED WORK

A. Specified elsewhere:

1. Section 01 32 16: Progress Schedules
2. Section 01 50 00: Construction Facilities and Temporary Controls

1.03 PRECONSTRUCTION CONFERENCES

A. City Engineer or his agent shall administer preconstruction conference for execution of Owner-Contractor Agreement, exchange of preliminary submittals, establishing Notice to Proceed date, stating Project procedures, and answering questions.

END OF SECTION

SECTION 01 32 16

PROGRESS SCHEDULES

PART 1 GENERAL

1.01 WORK INCLUDED

A. Procedures for preparation and submittal of construction Progress Schedules and periodical updating.

1.02 RELATED WORK

A. Conditions of the Contract.

B. Specified elsewhere:

1. Section 01 11 13: Summary of Work
2. Section 01 31 19: Project Meetings
3. Section 01 33 00: Submittal Procedures
4. Section 01 29 73: Schedule of Values
5. Section 01 70 00: Contract Closeout

1.03 FORMAT

A. Prepare Schedules as a horizontal bar chart with separate bar for each major portion of Work or operation, identifying first work day of each week.

B. Sequence of Listings: The Table of Contents of Specifications.

C. Scale and Spacing: To provide space for notations and revisions.

D. Sheet Size: Minimum 8 x 11 inches.

1.04 CONTENT

A. Show complete sequence of construction by activity, with dates for beginning and completion of each element of construction.

B. Identify each item by major Specification section number.

C. Provide sub-schedules to define critical portions of entire Schedule.

D. Show accumulated percentage of completion of each item, and total percentage of Work completed, as of the first day of each month.

E. Provide separate schedule of submittal dates for shop drawings, product data, and samples and dates reviewed submittals shall be required from the City Engineer or his agent. Show decision dates for selection of finishes.

F. Show delivery dates for Owner furnished items, if any.

G. Coordinate content with Section 01 29 73, Schedule of Values.

1.05 REVISIONS TO SCHEDULES

A. Indicate progress of each activity to date of submittal, and projected completion date of each activity.

B. Identify activities modified since previous submittal, major changes in scope, and other identifiable changes.

C. Provide narrative report to define problem areas, anticipated delays, and impact on Schedule. Report corrective action taken, or proposed, and its effect.

1.06 SUBMITTALS

A. Submit initial Schedules within 15 days after date established in Notice to Proceed. After review, resubmit required revised data within 10 days.

B. Submit revised Progress Schedules with each Application for Payment.

C. Submit under transmittal letter.

1.07 DISTRIBUTION

A. Distribute copies of reviewed schedules to job site file, subcontractors, suppliers, Engineer of Record, Owner, and other concerned entities.

B. Instruct recipients to promptly report, in writing, problems anticipated by projections shown in Schedules.

END OF SECTION

SECTION 01 33 00

SUBMITTAL PROCEDURES

PART 1 GENERAL

1.01 WORK INCLUDED

A. Procedures for submittals.

1.02 RELATED WORK

A. Conditions of the Contract.

B. Specified elsewhere:

1. Section 01 29 73: Schedule of Values
2. Section 01 32 16: Progress Schedules
3. Section 01 45 00: Quality Control
4. Section 01 70 00: Contract Closeout

1.03 SHOP DRAWINGS

A. Present in a clear and thorough manner. Title each drawing with Project and Contract name and number; identify each shop drawing by Specification section and paragraph number; identify each element of drawings by reference to sheet number and detail, schedule, or room name of Contract Documents. All equipment and materials shall have shop drawings submitted for them. Shop drawings shall be thoroughly checked and coordinated by the fabricator and Contractor prior to being submitted.

B. Identify field dimensions; show relation to adjacent or critical features or Work or products.

C. Minimum Sheet Size: 8 inches x 11 inches.

1.04 PRODUCT DATA

A. Submit only pages which are pertinent; clearly mark each copy of standard printed data to identify pertinent products, referenced to Specification Section and Article number. Show reference standards, performance characteristics, and capacities; wiring and piping diagrams and controls; components parts; finishes; dimensions; and required clearances.

B. Modify manufacturer's standard schematic drawings and diagrams to supplement

standard information and to provide information specifically applicable to the Work. Delete information not applicable.

1.05 MANUFACTURER'S INSTRUCTIONS

A. Manufacturer's instructions for storage, preparation, assembly, installation, adjusting, balancing, and finishing under provisions of Section 01 45 00, Quality Control.

1.06 CONTRACTOR REVIEW

A. Review submittals prior to transmittal; determine and verify field measurements, field construction criteria, manufacturer's catalog numbers, and conformance of submittal with requirements of Contract Documents.

B. Coordinate submittals with requirements of Work and of Contract Documents.

C. Sign or initial each sheet of shop drawings and product data, and each sample label to certify compliance with requirements of Contract Documents. Notify City Engineer or his agent in writing at time of submittal, of any deviations from requirements of Contract Documents.

D. Do not fabricate products or begin work which requires submittals until return of submittal with Engineer of Record acceptance.

1.07 SUBMITTALS REQUIREMENTS

A. Furnish submittals specified in sections of the specifications, and for all equipment and materials used in the project. Contractor shall establish a numbering system for all submittals. Resubmittals of corrected submittals shall use sequential letter suffixes.

B. Transmit submittals in accordance with approved Progress Schedule and in such sequence to avoid delay in the Work or work of other contracts.

C. Provide 8 x 4 inch blank space on each submittal for Contractor and Engineer stamps.

D. Apply Contractor's stamp, signed or initialed, certifying to review, verification of products, field dimensions and field construction criteria, and coordination of information with requirements of Work and Contract Documents.

E. Coordinate submittals into logical groupings to facilitate interrelation of the several items:

1. Finishes which involve Engineer selection of colors, textures, or patterns.

2. Associated items which require correlation for efficient function or for installation.

F. Submit number of copies of shop drawings Contractor requires, plus three copies to be retained by the Engineer.

G. Submit number of copies of product data and manufacturer's instructions Contractor requires, plus three copies to be retained by Engineer.

H. Submit under transmittal letter. Identify Project by title and number. Contract by number. Identify Work and product by Specifications section and Article number. Use established numbering system.

1.08 RESUBMITTALS

A. Make resubmittals under procedures specified for initial submittals; identify changes made since previous submittal. Use sequential letter suffixes after the submittal number for numbering resubmittals.

1.09 ENGINEER'S REVIEW

A. Engineer shall review shop drawings, product data, and samples and return submittals within ten days of receipt of a complete, Contractor checked submittal.

1.10 DISTRIBUTION

A. Duplicate and distribute reproductions of shop drawings, copies of product data, and samples, which bear Engineer's stamp of approval, to job site file, Record Documents file, subcontractors, suppliers and other entities requiring information.

END OF SECTION

SECTION 01 42 00

REFERENCE STANDARDS
(Architectural, Civil & Structural)

PART 1 GENERAL

1.01 WORK INCLUDED

A. Applicability of Reference Standards.

B. Provisions of Reference Standards at site.

C. Acronyms used in Contract documents for Reference Standards and current designations. Source of Reference Standards.

1.02 RELATED WORK

A. Conditions of the Contract.

1.03 QUALITY ASSURANCE

A. For products or workmanship specified by association, trade, or Federal Standards, comply with requirements of the standard, except when more rigid requirements are specified or are required by applicable codes.

B. The date of the standard is that which is in effect as of the Bid date, or date of Owner-Contractor Agreement when there are no bids, except when a specific date is specified.

C. When required by individual Specifications section, obtain copy of standard. Maintain copy at jobsite during submittals, planning, and progress of the specific work, until Substantial Completion.

1.04 SCHEDULE OF REFERENCES

AASHTO American Association of State Highway and Transportation Officials
444 North Capitol Street, N. W.
Washington, DC 20001

ACI American Concrete Institute
Box 19150
Reford Station
Detroit, MI 48219

AISC American Institute of Steel Construction
400 North Michigan Avenue, Eighth Floor
Chicago, IL 60611

AISI American Iron and Steel Institute
1000 16th Street, N. W.
Washington, DC 20036

ANSI American National Standards Institute
1430 Broadway
New York, NY 10018

ASTM American Society for Testing and Materials
1916 Race Street
Philadelphia, PA 19103

BHMA Builders Hardware Manufacturers Association
60th East 42nd Street
New York, NY 10017

CPSC U. S. Consumer Product Safety Commission

NEMA National Electrical Manufacturers' Association
2101 L Street, N. W.
Washington, DC 20037

PCI Prestressed Concrete Institute
201 North Wacker Drive
Chicago, IL 60606

TDOT Tennessee Department of Transportation
James K Polk Bldg
Nashville, TN 37243

UL Underwriters' Laboratories, Inc.
333 Pfingston Road
Northbrook, IL 60062

END OF SECTION

SECTION 01 45 00

QUALITY CONTROL

PART 1 GENERAL

1.01 WORK INCLUDED

A. General Quality Control.

B. Workmanship.

C. Manufacturer's Instructions.

D. Manufacturer's Certificates.

1.02 RELATED WORK

A. Specified elsewhere:

1. Section 01 33 00: Submittal Procedures
2. Section 01 42 00: Reference Standards

1.03 QUALITY CONTROL, GENERAL

A. Maintain quality control over suppliers, manufacturers, products, services, site conditions, and workmanship, to produce work of specified quality.

1.04 WORKMANSHIP

A. Comply with industry standards except when more restrictive tolerances or specified requirements indicate more rigid standards or more precise workmanship.

B. Perform work by persons qualified to produce workmanship of specified quality.

C. Secure products in place with positive anchorage devices designed and sized to withstand stresses, vibration, and cracking.

1.05 MANUFACTURERS' INSTRUCTIONS

A. Comply with instructions in full detail, including each step in sequence. Should instructions conflict with Contract Documents, request clarification from Engineer of Record before proceeding.

1.06 MANUFACTURERS' CERTIFICATES

A. When required by individual Specifications Section, submit manufacturer's certificate, in duplicate, that products meet or exceed specified requirements.

END OF SECTION

SECTION 01 45 23

INSPECTIONS AND TESTS FOR PIPE REPLACEMENT

PART 1 GENERAL

1.01 WORK INCLUDED

A. The work shall include providing all necessary equipment, material, labor and services required to properly test and inspect all work.

1.02 RELATED WORK

A. Specified elsewhere:

1. Section 01 11 13: Summary of Work
2. Section 31 23 33: Trenching, Backfilling, and Compaction
3. Section 32 12 16: Asphaltic Concrete Paving
4. Section 33 05 15: Pipe, Joints, Fittings and Appurtenances
5. Section 33 30 00: Sanitary Sewer

1.03 REFERENCES

A. American Society for Testing Materials; latest edition:

1. ASTM C828: Practice for Low-Pressure Air Test of Vitrified Clay Pipe Lines (4 to 12 inch)

B. American National Standards Institute (ANSI)/American Water Works Association (AWWA); latest edition:

1. ANSI/AWWA C600: Installation of Ductile-Iron Water Mains and their Appurtenances
2. ANSI/AWWA C651: Disinfecting Water Mains

1.04 COST

A. Work in this Section shall be at the Contractor's expense and not part of any project allowance, unless specified otherwise, herein.

PART 2 PRODUCTS

(NOT APPLICABLE)

PART 3 EXECUTION

3.01 INSPECTION

A. The City Engineer or his agent shall inspect the work in any part, or as a whole, and shall make or request all tests deemed necessary to insure that the work has been completed in accordance with the plans and specifications.

B. Repair or replace, at his expense, any length of pipe, manhole, structure, pavement, and any material which is found or tested to be defective or deficient during the work or within 1 year after the work has been completed and accepted by the Owner.

C. Any unfaithful or imperfect work which may be discovered before the final acceptance of the work shall be corrected immediately on the requirement of the City Engineer or his agent, notwithstanding that it may have been overlooked or approved by the proper inspector. The inspection of the work shall not relieve the Contractor of any of his obligations to perform sound and reliable work as herein described. And all the work, of whatever kind, which during its progress, and before it is finally accepted may become damaged for any cause, shall be properly taken up or removed so much of its as may be objectionable and be replaced by good and sound work satisfactory to the City Engineer or his agent.

3.02 PIPE TESTS

A. All pipe shall be tested by the Contractor in the presence of the City Engineer or his agent before being incorporated into the work. When laid, pipe shall not be covered unless and until inspected by the City Engineer or his agent and permission granted. The necessary facilities for proper inspection shall be provided by the Contractor when requested by the City Engineer or his agent.

B. Manufacturer's certificates are acceptable in lieu of tests for materials. If independent laboratory tests are desired by the City Engineer or his agent, they shall be secured by the Contractor; the Contractor shall be reimbursed by the Owner for the actual costs of such tests.

3.03 TESTING OF SANITARY SEWER

A. Prior to the final inspection, the required tests shall be completed in the presence of the City Engineer or his agent in an approved manner with acceptable results.

B. Prove the watertightness of the sewer system or portions thereof by a low pressure air test, at such times as the City Engineer or his agent may direct. Test shall be made only in the presence of the City Engineer or his agent. Furnish all plugs, compressor, power, and other labor and equipment required for the test and shall make repairs necessary until test results are satisfactory.

C. A low pressure air test shall be employed. The testing equipment, procedure, and results shall all be subject to the strict approval of the City Engineer or his agent. Results of the air test shall be reviewed for compliance with ASTM designation C-828, AND C-924, current revisions. The air test is to be conducted between two (2) consecutive manholes. The test equipment shall consist of two (2) plugs (one tapped and equipped for air inlet connection), a shut-off valve, a pressure regulating valve, a pressure reduction valve, and a monitoring pressure gauge having a pressure range from 0 to 5 psi, graduated in 0.10 psi with an accuracy of .04 psi. The test equipment shall be set up outside the manhole for easy access and reading. Air shall be supplied to the test slowly and shall be regulated to prevent the pressure inside the pipe from exceeding 5.0 psig. The pipeline shall be filled until a constant internal pressure of 3.5 psig is maintained. The internal pressure shall be maintained at 3.5 psig or slightly above for a five (5) minute stabilization period, after which time the internal pressure is adjusted to 3.5 psig, the air supply shut off and the test begun. No person shall remain in the manhole while pipe is being pressurized or throughout the test for safety purposes. A pressure drop of 1.0 psi from 3.5 to 2.5 psig shall be allowed for the test times specified in the following table, based upon the designated pipe size and test segment length.

1. For concrete pipe test, see ASTM C 924.
2. For PVC pipe, see the next table.

AIR TEST TABLE
PVC PIPE
BASED ON EQUATIONS FROM ASTM C-828 LATEST REVISION
SPECIFICATIONS TIME (MIN:SEC)
REQUIRED FOR PRESSURE DROP FROM 3.5 TO 2.5 PSI
WHEN TESTING ONE PIPE DIAMETER ONLY

	PIPE DIAMETER, INCHES						
LENGTH OF TEST SEGMENT	4	6	8	10	12	15	18
25	0:04	0:10	0:17	0:22	0:26	0:31	0:36
50	0:09	0:20	0:35	0:44	0:53	1:02	1:12
75	0:13	0:30	0:53	1:06	1:20	1:33	1:48
100	0:18	0:40	1:11	1:29	1:47	2:05	2:24
125	0:22	0:50	1:29	1:51	2:13	2:36	3:00
150	0:26	1:00	1:46	2:13	2:40	3:07	3:36
175	0:31	1:10	2:04	2:35	3:07	3:39	4:12
200	0:35	1:19	2:22	2:58	3:33	4:17	4:48
225	0:40	1:30	2:40	3:20	4:00	4:41	5:24
250	0:44	1:40	2:58	3:42	4:45	5:13	6:00
275	0:48	1:50	3:16	4:06	4:54	5:44	6:36
300	0:53	2:00	3:33	4:27	5:20	6:15	7:12
350	1:02	2:20	4:09	5:11	6:14	7:18	8:24
400	1:10	2:40	4:45	5:56	7:07	8:20	9:36
450	1:19	3:00	5:20	6:40	8:01	9:23	10:49
500	1:28	3:20	5:56	7:25	8:54	10:26	12:01

Should the 1.0 psi drop occur in less time than that specified in the table the sewer segment shall have failed. If the time required for the pressure to drop 1.0 psi is greater than that shown in the table, the sewer segment shall have passed. For a more detailed description of the air test method refer to ASTM designation C-828, current revision. An air pressure correction shall be required when the prevailing ground water is above the sewer line being tested and shall be calculated as follows:

(Ground Water Depth (ft.) ÷ 2.31) + 3.5 = Starting Test Pressure

Ending Test Pressure = Starting Pressure - 1.0 psi

There is no change from time requirements established for the basic air test.

D. Manhole tests:

1. Manholes shall be tested by vacuum test, after assembly but prior to backfilling. Test shall comply with ASTM standard C1244, latest revision. Manholes shall be tested by vacuum, only if constructed of precast concrete. Testing shall include the joint between the concrete cone and spacer rings.
2. Stubouts, manhole boots and pipe plugs shall be secured to prevent movement

while the vacuum is drawn.

3. Installation and operation of vacuum equipment and indicating devices shall be in accordance with equipment specifications for which performance information has been provided by the manufacturer and approved by the Tennessee State Department of Health.
4. A measured vacuum of 10 inches of mercury shall be established in the manhole. The time for the vacuum to drop to nine inches of mercury shall be recorded.
5. Acceptance standards for leakage shall be established from the elapsed time for a negative pressure change from 10 inches to nine inches of mercury. The maximum allowable leakage rate for a four-foot diameter manhole shall be in accordance with the following:

Manhole Depth	Minimum Elapsed Time for a Pressure Change of 1 Inch Hg
10 ft. or less	60 seconds
>10 ft. but <15 ft.	75 seconds
>15 ft. but <25 ft.	90 seconds

For manholes five feet in diameter, add an additional 15 seconds and for manholes six feet in diameter, add an additional 30 seconds to the time requirements for four-foot diameter manholes.

6. If the manhole fails the test, necessary repairs shall be made and the vacuum test repeated one time.
7. If a manhole fails the second test or if the joint mastic is completely pulled out during the vacuum test, the manhole shall be disassembled and the mastic replaced.

E. Testing of Flexible Pipes:

1. The Contractor shall deflection test the entire length of PVC pipe by means of a go-no-go mandrel to assure that deflection limits have not been exceeded. For pipe backfilled 60 days or less, the mandrel shall be set for 5% maximum deflection, and for pipe backfilled more than 60 days, the mandrel shall be set for 7.5% maximum deflection. The testing shall be performed completely at the expense of the Contractor and shall be performed in the presence of the City Engineer or his agent. Mandrel and proving ring details shall be approved by the City Engineer or his agent and shall be sized at 5% or 7.5% less than ASTM dimensions for the sewer pipe (in accordance with ASTM D-3034 and F-679). The 5% mandrel test shall be performed up to two (2) months after pipe is backfilled. The 7.5% mandrel test shall be performed no sooner than two (2) months after backfill of the pipe is completed. All pipe which fails the deflection test shall be removed and replaced at the Contractor's expense. The "rerounder" technique shall not be allowed. The

Contractor shall use approved nine (9) arm mandrels and proving rings for each size of mainline pipe. The contract length "L" of the mandrel arms and the actual mandrel diameter "D" (ID of the proving ring) shall equal the dimensions in Table I below. Critical mandrel dimensions shall carry a tolerance of ±.01."

TABLE 9 Arm Mandrel D Dimension			
Nom. Dia.	L	ASTM D3034 SDR 35	ASTM D2751 (6" only)* ASTM D2680
6"	6"	5.31"	5.31" (SDR 35) 5.14" (SDR 23.5)
8"	8"	7.09"	
10"	10"	8.84"	
12"	12"	10.51"	
15"	15"	12.86"	
18"	18"	15.84"	
21"	18"	18.96"	
24"	18"	21.32"	
27"	18"	23.61"	

Mandrel and proving ring may be obtained from Wortco, Inc., 220 High Street, Franklin, Ohio 45005 (1-513-746-6439). Hurco Enterprises (1-800-843-1300), Cherne Industries (1-800-843-7584) or equal.

F. The Owner reserves the right to inspect the complete-in-place sanitary sewer pipe with in-line television inspection equipment operated by Municipality forces. The Contractor shall notify the Owner at least two (2) weeks prior to a section being completed in order to schedule the television inspection. Any defective work revealed by this inspection shall be repaired by the Contractor, at his expense.

3.04 INTERMEDIATE INSPECTIONS

A. The City Engineer or his agent shall be allowed access to inspect any work to insure compliance with the plans and specifications.

B. Any inspection by the City Engineer or his agent which may have overlooked or approved improper or damaged work shall not relieve the Contractor of the responsibility to repair or replace the defective or damaged work.

C. The pipe shall be visually inspected by light with a reasonable full, round circle of light visible from one manhole to the other, or by a laser with targets placed in the manhole, or by traveling through the pipe of adequate size.

D. The manhole and structures shall be visually examined for size, shape, appearance and condition.

3.05 FINAL INSPECTION OF SITE

A. Prior to the final inspection repair or replace any damaged pipe, manholes, vaults, structures, slope protection, pavement, curb and gutter, landscaping, or any other items. The entire system shall be structurally sound and watertight with the manhole frames and covers set at the proper elevations

B. Upon notification by the Contractor of the completion of any major part of the work, the City Engineer or his agent shall carefully inspect the part of the work, in part and as a whole and make such tests as will satisfy him that every provision of the contract has been faithfully carried out. He shall carefully inspect all lines and manholes, etc., by light test and all other work done by the Contractor. The project site shall be clean, and all excess materials removed. All pipe lines are intended to be straight from manhole to manhole, and a reasonably full, round circle of light shall be visible from one end to the other. Any broken or cracked pipe shall be replaced with sound pipe. Any deposit found in the sanitary sewer or storm drain including protruding cement or packing, shall be removed and the pipe barrel left clean for its entire length. The sanitary sewer must be practically watertight, and no leakage shall be allowed. All manholes and inlets shall be of the specified size, shape and material, of neat appearance, shall have their inverts shaped and shall have their tops set at the proper grade.

C. In general, the work shall comply with these specifications; and if not found to be so in any respect, it shall be brought to the proper condition by cleaning, painting or, if necessary, by rebuilding, all at the expense of the Contractor. If in the opinion of the City Engineer or his agent the above methods of testing do not secure satisfactory results and a defect exists in a pipe line or other construction not accessible except by uncovering, the City Engineer or his agent shall order the work to be uncovered. If, however, it be found that after the pipe or other work has been uncovered no defect exists, or the defect was not the fault of the Contractor, then the expense so incurred by the Contractor shall be borne by the Owner. During final inspection the Contractor shall, at his own expense, furnish suitable provisions as to needed drainage, workmen, and appliances.

END OF SECTION

SECTION 01 50 00

CONSTRUCTION FACILITIES AND TEMPORARY CONTROLS

PART 1 GENERAL

1.01 WORK INCLUDED

A. Telephone Service.

B. Water.

C. Sanitary Facilities.

D. Barriers.

E. Protection of Installed Work.

F. Surface Water Control.

G. Cleaning During Construction.

1.02 RELATED WORK

A. Specified elsewhere:

1. Section 01 11 13: Summary of Work

1.03 TELEPHONE SERVICE

A. Provide telephone service to field offices. Provide cell phone for onsite superintendent.

1.04 WATER

A. Provide service required for construction operations. Provide backflow preventers or check valves as required by local code.

1.05 SANITARY FACILITIES

A. Provide and maintain required temporary facilities and enclosures.

B. Permanent facilities used during construction operations shall be maintained in a sanitary condition and restored at completion of the Project.

1.06 BARRIERS

A. Provide as required to prevent public entry to construction areas and to protect existing facilities and adjacent properties from damage from construction operations.

B. Provide barriers around trees and plants designated to remain. Protect against vehicular traffic, stored materials, dumping, chemically injurious materials, and puddling or continuous running water. Barriers shall protect root systems of trees and shrubs which are to remain.

1.07 PROTECTION OF INSTALLED WORK

A. Provide temporary protection for installed products. Control traffic in immediate area to minimize damage.

1.08 SECURITY

A. Provide security program and facilities to protect Project from unauthorized entry, vandalism, and theft.

1.09 SURFACE WATER CONTROL

A. Grade site to drain. Maintain excavations free of water. Provide and operate pumping equipment. Provide sediment control of pumped water in accordance with Erosion and Sediment Control Standards.

1.10 CLEANING DURING CONSTRUCTION

A. Control accumulation of waste materials and rubbish; periodically dispose of off-site.

B. Clean interior areas prior to start of finish work, maintain areas free of dust and other contaminants during finishing operations.

1.11 REMOVAL

A. Remove temporary materials, equipment, services, and construction prior to Substantial Completion inspection.

B. Clean and repair damage caused by installation or use of temporary facilities. Remove underground installation to a depth of 2 feet; grade site as indicated. Restore existing facilities used during construction to specified, or to original condition.

END OF SECTION

SECTION 01 53 26

BYPASS PUMPING

PART 1 GENERAL

1.01 WORK INCLUDED

A. This work includes temporary or permanent pumps, pipe, valves, etc. for a complete bypass pumping arrangement.

1.02 SUBMITTALS

A. Shop drawings, catalog data sheets, diagrams, design calculations, and other such data necessary to describe completely and to substantiate compliance with the drawings and specifications shall be submitted for all materials, equipment, and accessories specified in this section, in accordance with the procedure set forth in Section 01 33 00.

B. Letter of certification from the contractor stating the pumping capacity of the proposed pumping system with the single largest pump out of service.

PART 2 PRODUCTS

2.01 EQUIPMENT

A. General

1. Pumps shall be designed to pump raw, unscreened sewage and shall handle a minimum of 3 inch solids.
2. Minimum pump capacity and head shall be as required.
3. Pump shall be powered by electricity or by a fuel engine.
4. Fuel powered engines shall be muffled to a maximum noise of 75 dB at a distance of 50 feet.
5. Piping shall include check valves and isolation valves to ensure pump operation and to allow maintenance of bypass pumping system.

B. Piping

1. Piping shall be PVC, aluminum or HDPE. Piping shall be hydrostatically tested in place to 75 psi. Piping shall be designed for an operating pressure of 125 psi.
2. Piping shall be buried where crossing roads and protected with a steel plate or other method approved by the City Engineer or his agent. Piping shall be protected where installed in ditches and securely anchored to prevent movement and to ensure the piping does not block drainage ditches.

3. Piping shall enter existing manhole at an elevation of 2 feet below grade and shall have a steel plate or temporary pavement patch over the pipe. Upon completion of the project, the manhole shall be repaired and grouted to original condition.

PART 3 EXECUTION

3.01 PUMPING OPERATION

A. Pumping operation shall continue uninterrupted until the main line is completed, tested and approved by the City Engineer or his agent. Onsite fuel storage shall be adequate for 24 hours of continuous operation, with a minimum of four hours of fuel on site at all times. The pumps shall be monitored 24 hours per day, and a checklist maintained by the contractor showing required preventative maintenance and observations and when it was performed. If the pumps are not manned 24 hours per day, a high level and pump failure alarm shall be installed and prepared to dial the contractor and the City, as directed. The controls shall include a run time meter on the pumps.

END OF SECTION

SECTION 01 55 00

TRAFFIC REGULATION

PART 1 GENERAL

1.01 WORK INCLUDED

A. Construction Parking Control.

B. Flagmen.

C. Flares and Lights.

D. Haul Routes.

E. Traffic Signs and Signals.

F. Removal.

1.02 RELATED WORK

A. Specified elsewhere:

1. Section 01 50 00: Construction Facilities and Temporary Controls
2. Section 02 01 00: Traffic, Property, and Utility Maintenance and Coordination.

PART 2 PRODUCTS

2.01 SIGNS, SIGNALS, AND DEVICES

A. Post-mounted and wall-mounted traffic control and informational signs.

B. Traffic Control Signals: As approved by local jurisdiction, or Department of Transportation.

C. Traffic Cones and Drums, Flares and Lights: As approved by local jurisdiction, or Department of Transportation.

D. Flagman Equipment: As required by local jurisdiction, or Department of Transportation.

PART 3 EXECUTION

3.01 CONSTRUCTION PARKING CONTROL

A. Control vehicular parking, including Contractor□s employees, to prevent interference with public traffic and parking, and access by emergency vehicles.

B. Monitor parking of construction personnel's vehicles. Maintain vehicular access to and through parking areas.

C. Prevent parking on or adjacent to roads or in unsafe areas.

3.02 FLAGMEN

A. Provide trained and equipped flagmen to regulate traffic when construction operations or traffic encroach on public traffic lanes.

3.03 FLARES AND LIGHTS

A. Use flares and lights during hours of low visibility to delineate traffic lanes and to guide traffic.

3.04 HAUL ROUTES

A. Consult with authorities, establish public thoroughfares to be used for haul routes and site access.

B. Confine construction traffic to designated haul routes.

C. Provide traffic control at critical areas of haul routes to regulate traffic, to minimize interference with public traffic.

3.05 TRAFFIC SIGNS AND SIGNALS

A. At approaches to site and on site, install traffic signs and signals, if needed, at crossroads, detours, parking areas and elsewhere as needed to direct construction and affected public traffic.

B. Install and operate traffic control signals to direct and maintain orderly flow of traffic in areas under Contractor's control and areas affected by Contractor's operations.

C. Relocate signs and signals as Work progresses, to maintain effective traffic control.

3.06 REMOVAL

A. Remove equipment and devices when no longer required. Repair damage caused by installation. Remove post settings to a depth of 2 feet.

END OF SECTION

SECTION 01 60 00

MATERIAL AND EQUIPMENT

PART 1 GENERAL

1.01 WORK INCLUDED

A. Products.

B. Transportation and Handling.

C. Storage and Protection.

D. Product Options.

E. Products List.

F. Substitutions.

1.02 RELATED WORK

A. Specified elsewhere:

1. Section 01 33 00: Submittal Procedures
2. Section 01 42 00: Reference Standards
3. Section 01 45 00: Quality Control

1.03 PRODUCTS

A. Products include material, equipment, and systems.

B. Comply with Specifications and referenced standards as minimum requirements.

C. Components required to be supplied in quantity within a Specification section shall be the same, and shall be interchangeable.

1.04 TRANSPORTATION AND HANDLING

A. Transport products by methods to avoid product damage; deliver in undamaged condition in manufacturer's unopened containers or packaging, dry.

B. Provide equipment and personnel to handle products by methods to prevent soiling or damage.

C. Promptly inspect shipments to assure that products comply with requirements, quantities are correct, and products are undamaged.

1.05 STORAGE AND PROTECTION

A. Store products in accordance with manufacturer's instructions, with seals and labels intact and legible. Store within temperature and humidity ranges required by manufacturer's instructions.

B. For exterior storage of fabricated products, place on sloped supports above ground. Cover products subject to deterioration with impervious sheet covering; provide ventilation to avoid condensation.

C. Store loose granular materials on solid surface in a well-drained area; prevent mixing with foreign matter.

D. Arrange storage to provide access for inspection. Periodically inspect to assure products are undamaged, and are maintained under required conditions.

1.06 PRODUCT OPTIONS

A. Products Specified by Reference Standards or by Description Only: Any product meeting those standards.

B. Products Specified by Naming One or More Manufacturers with a Provision for Substitutions: Submit a request for substitution for any manufacturer not specifically named.

1.07 PRODUCTS LIST

A. Within 15 days after date established in Notice to Proceed, submit complete list of major products proposed for use, with name of manufacturer, trade name, and model number of each product.

1.08 SUBSTITUTIONS AND OR EQUAL ITEMS

A. Only within 15 days after date established in Notice to Proceed shall the City Engineer or his agent consider requests from Contractor for substitutions. Subsequently, substitutions shall be considered only when a product becomes unavailable by no fault of Contractor. A substitution is when material or product is substantially different from item specified. An “or equal” item is not considered a substitution but must be proved to the satisfaction of the City Engineer or his agent that the “or equal” item is of equal quality, equal performance, same method of operation, equal or lower power consumption, equal or lower maintenance costs, and of equal or better installed experience (minimum of 10 projects.)

B. Document each request with complete data substantiating compliance of proposed substitution with Contract Documents, for both substitutions and or equal.

C. Request for substitution and or equal constitutes a representation that Contractor:

1. Has investigated proposed product and determined that it meets or exceeds, in all respects, specified product.
2. Shall provide the same warranty for substitution as for specified product.
3. Shall coordinate installation and make other changes which may be required for Work to be complete in all respects.
4. Waives claims for additional costs which may subsequently become apparent.
5. Shall pay the Engineer of Record to revise construction drawings, if necessary, for preparation of Record Drawings.

D. Substitutions shall not be considered when they are indicated or implied on shop drawings or product data submittals without separate written request, or when acceptance shall require substantial revision of Contract Documents.

E. The City Engineer or his agent shall determine acceptability of proposed substitution, and the or equal item and shall notify Contractor of acceptance or rejection in writing within a reasonable time.

F. A maximum of 3 substitutions requests shall be allowed on this project. Only one request for or equal shall be considered for each product. When submittal is not accepted, provide specified product.

END OF SECTION

SECTION 01 70 00

CONTRACT CLOSEOUT

PART 1 GENERAL

1.01 WORK INCLUDED

A. Closeout Procedures.

B. Final Cleaning.

C. Project Record Documents.

D. Warranties and Bonds.

1.02 RELATED WORK

A. Conditions of the Contract.

B. Specified elsewhere:

1. Section 01 11 13: Summary of Work
2. Section 01 50 00: Construction Facilities and Temporary Controls
3. Section 01 60 00: Material and Equipment

1.03 CLOSEOUT PROCEDURES

A. Comply with procedures stated in General Conditions of the Contract for issuance of Certificate of Substantial Completion.

B. When Contractor considers Work has reached final completion, submit written certification that Contract Documents have been reviewed, Work has been inspected, and that Work is complete in accordance with Contract Documents and ready for inspection by the City Engineer or his agent.

C. A final inspection shall be conducted by the City Engineer or his agent, when requested by the Contractor and when all the Work is done. Punch list items shall be remedied immediately and the Inspector and City Engineer or his agent notified.

D. In addition to submittals required by the conditions of the Contract, provide submittals required by governing authorities, and submit an Application for Final Payment with a final statement of accounting giving total adjusted Contract Sum, previous payments, change orders, allowances, and sum remaining due. Retainage shall be shown as zero. Final payment shall not be made until all punch list items are satisfied.

E. Engineer of Record shall issue a final Change Order reflecting approved adjustments to Contract Sum not previously made by Change Order.

1.04 FINAL CLEANING AND PAINTING

A. Execute final cleaning prior to final inspection.

B. Clean site; sweep and pressure wash paved areas and curbs/sidewalks, rake clean other surfaces; clean drainage system.

C. Remove waste and surplus materials, rubbish, and construction facilities from the Project and from the site.

D. Seed and mulch all disturbed areas not covered by structure, walk or pavement.

1.05 PROJECT RECORD DOCUMENTS

A. Store record documents separate from those used for construction. A new clean set of plans shall be used, and their sole use shall be for record drawings.

B. Contractor shall keep documents current; do not permanently conceal any work until required information has been recorded.

C. At Contract closeout, submit record documents with transmittal letter containing date, Project title, Contractor's name and address, list of documents, and signature of Contractor. Provide record set of prints with red marks reflecting changes and other records of construction.

1.06 WARRANTIES AND BONDS

A. Provide duplicate, notarized copies. Execute Contractor's submittals and assemble documents executed by subcontractors, suppliers, and manufacturers. Provide table of contents and assemble in binder with durable plastic cover.

B. Submit material prior to final application for payment. For equipment put into use with Owner's permission during construction, submit within 10 days after first operation. For items of Work delayed materially beyond Date of Substantial Completion, provide undated submittal within ten days after acceptance, listing date of acceptance as start of warranty period.

END OF SECTION

SECTION 01 71 23

FIELD ENGINEERING

PART 1 GENERAL

1.01 WORK INCLUDED

A. Field engineering services for laying out the Project.

B. Engineer of Record shall identify control points and limits of work, and Owner shall provide specified construction stakeout, as indicated in Section 01 80 00.

1.02 RELATED WORK

A. Conditions of the Contract.

B. Specified elsewhere:

1. Section 01 80 00: Special Conditions

1.03 QUALITY CONTROL

A. Professional Surveyor: Registered Professional Surveyor shall provide the construction stakeout.

B. Professional Engineer: Registered Professional Engineer skilled in disciplines required for service on Project, licensed in the State in which Project is located.

1.04 PROJECT RECORD DOCUMENTS

A. Maintain complete, accurate log of control and survey work as it progresses.

B. Submit Record Documents under provisions of Section 01 70 00.

PART 2 PRODUCTS

(NOT APPLICABLE)

PART 3 EXECUTION

3.01 INSPECTION

A. Verify locations of survey control points prior to starting work. Promptly notify City Engineer or his agent of any discrepancies discovered.

3.02 SURVEY REFERENCE POINTS

A. Protect survey control points prior to starting site work; preserve permanent reference points during construction. Make no changes without prior written notice to Engineer of Record.

B. Promptly report to Engineer of Record the loss or destruction of any reference point or relocation required because of changes in grades or other reasons. Replace dislocated survey control points based on original survey control.

3.03 SURVEY REQUIREMENTS

A. Maintain a minimum of 2 permanent bench marks on site, referenced to established control points. Record locations, with horizontal and vertical data, on Project Record Documents.

B. Maintain stakeout performed by Owner and supplement it as required.

C. Periodically verify layouts by same means.

D. The plans and supplementary drawings shall not be scaled and the Contractor must verify all dimensions and elevations at the site prior to proceeding with the work. The Contractor shall also verify existing utility locations prior to purchasing materials affected by these locations.

END OF SECTION

SECTION 01 80 00

SPECIAL CONDITIONS

PART 1 GENERAL

1.01 WORK INCLUDED

A. The specifications have been arranged and sectioned only as a means of reference and shall not be interpreted as being a proper or complete means or method in which to arrange, install or complete the work.

B. The Contractor shall comply with all rules and regulations of the Tennessee Occupational Safety and Health Standards for the Construction Industry. The Contractor is required to employ safe practices and comply with all safety standards and laws.

C. The definition of Owner for this project is City of Kingsport, Tennessee.

1.02 LOCATION OF WORK

A. The site of the work is Kingsport, Tennessee.

1.03 SPECIAL EQUIPMENT

A. Contractor shall have all necessary equipment on site to locate existing laterals at all times.

B. Contractor shall have a telescoping lateral camera on site capable of videoing a minimum of 10 feet up the laterals from the main line.

PART 2 PRODUCTS

(NOT APPLICABLE)

PART 3 EXECUTION

3.01 LAYING OUT WORK [OWNER-PROVIDED FIELD STAKEOUT]

A. It is imperative that the Contractor work within the shown rights of way or easements, at all times, unless approved otherwise by the property owner and the City Engineer or his agent.

B. The Owner shall provide to the Contractor one field stakeout, one time, for work in the contract as follows:

1. Sanitary Sewer: Center stakes and two offset stakes shall be provided at manholes. The Owner shall provide the stakeout information to the Contractor by cut sheet, showing existing and invert elevations, and computed cuts to the invert of the pipe.
2. The Contractor shall schedule the survey work by giving seven days notice to the Owner.

C. The Contractor shall carefully protect and preserve all established survey points provided by the Owner. Any survey work in addition to that described in above Paragraph C shall be at the Contractor's expense.

D. The plans and supplementary drawings shall not be scaled and the Contractor must verify all dimensions and elevations at the site prior to proceeding with the work. The Contractor shall also verify existing utility locations prior to purchasing materials affected by these locations.

E. Contractor shall locate all existing services at the property line prior to setting the tee in the main line. The locating of said laterals is not a part of the Owner provided stakeout.

3.02 TEMPORARY FACILITIES

A. The Contractor shall provide and maintain, at his expense, toilet accommodations for his employees at locations approved by the Engineer of Record. The sanitary facility shall comply with all Local and State Sanitary Health Regulations for the installation, use and waste removal.

B. The Contractor shall provide and pay for all water, electricity, illumination, heat and other utilities required for the proper execution of the work. The Owner shall provide water at his existing system for use by the Contractor in this project.

C. The Contractor shall provide and maintain all barricades, fences, and other protective devices required around the project site and storage area in order to protect the work, his employees and the public.

3.03 SEQUENCE OF WORK

A. Soil and erosion control items shall be placed prior to any land disturbing activity.

3.04 OVERHEAD UTILITIES

A. The Contractor shall contact utilities with overhead facilities in the project area or adjacent to the project area and request the utility to make safety arrangements to protect workers in the vicinity of the lines. The Contractor shall not proceed with work until such measures are in place. The invoice from the utility shall be paid directly by the Owner.

3.05 CITY OF KINGSPORT STANDARDS

A. The Contractor shall comply with the City of Kingsport Design Standards and the City of Kingsport Construction Specifications of latest issue.

3.06 PERMITS

A. The Contractor is required to obtain all construction permits required for this project including blasting and land disturbing permit. The Contractor shall obtain all other construction permits required for this project.

3.07 RESTORATION AND MONTHLY PAY REQUESTS

A. The Contractor shall be required to provide restoration of the project site to within 200 feet of where pipe is actively being laid, each month before submitting his pay request to the Resident Project Representative for review and signature. The City Engineer or his agent shall not review and approve pay requests until such restorations are complete. Exceptions shall only be made by the City Engineer or his agent.

END OF SECTION

SECTION 02 01 00

TRAFFIC, PROPERTY AND UTILITY MAINTENANCE AND COORDINATION

PART 1 GENERAL

1.01 WORK INCLUDED

A. The work shall include providing all materials, equipment, labor and services required to regulate and coordinate traffic, to protect and maintain property, to notify the public of work conditions, and to coordinate the work with the respective Utility Companies.

1.02 SITE

A. The Contractor shall, at his expense, maintain the work site in a clean and orderly appearance at all times. All debris and surplus material collected shall be disposed of off the work site by the Contractor, at his expense. Access for emergency vehicles shall be maintained at all times.

1.03 RELATED WORK

A. Specified elsewhere:

1. Section 01 11 13: Summary of Work
2. Section 01 55 00: Traffic Regulation

1.04 REFERENCES

A. Tennessee Erosion and Sediment Control Handbook; latest revision.

B. Tennessee Department of Transportation - Standard Specifications and Standard Drawings; latest revisions.

C. Tennessee Department of Transportation - Work Area Protection Manual

D. U.S. Department of Transportation - Manual on Uniform Traffic Control Devices

PART 2 PRODUCTS

(NOT APPLICABLE)

PART 3 EXECUTION

3.01 TRAFFIC MAINTENANCE AND COORDINATION

A. The Contractor shall make every attempt possible to maintain through traffic at all times. (One lane of traffic shall be maintained at all times and two (2) flagmen shall be provided at all times work is in progress and traffic must be controlled.) The Contractor shall not close or excavate within the right-of-way of a street or alley without obtaining the approval of and the required permits from the Local Governing Authorities.

B. When work conditions dictate that a street or part of a street be closed to traffic, the Contractor shall provide and maintain, at his expense, all signs, barricades and flashing lights necessary to physically close a street or part of a street adjacent to work area. The Contractor shall provide and maintain all traffic control devices and signs required to coordinate and detour the through traffic around the closed street.

C. The Contractor shall provide and maintain, at his expense, all signs, cones, stands and flagmen required to control and protect traffic passing through a work zone.

D. The method of controlling the traffic passing through a work zone and the barricades required for closing a street to traffic shall be in accordance with the Traffic Control Details included in the supplementary drawings. All traffic control and street closed signs shall be in accordance with the Federal "Manual on Uniform Traffic Control Devices."

E. The Contractor shall keep all street intersections open to traffic, when practical. When work is perpendicular to the street, the Contractor shall work in no more than one-half (1/2) of the street width, at one time. The first half of work must be completed and the street passable prior to working in the second half.

F. The Contractor shall provide and maintain a safe and passable pedestrian access for the public conducting business or residing within the work area. Sidewalks shall remain clear and open at all times during the work, unless approved otherwise by the Owner or local governing authorities.

G. The Contractor shall provide the necessary diversion ditches, dikes or temporary culverts required to prevent mud and debris from being washed onto the streets or property. The Contractor's vehicles shall be kept clean to prevent mud or dust from being deposited on streets.

3.02 PROPERTY MAINTENANCE AND COORDINATION

A. The Contractor shall notify the property owner(s) forty-eight (48) hours prior to working within easements located upon private property in order to coordinate a means of ingress and egress to the work area and determine a storage area for materials. Storage area shall be fenced, if necessary, to keep animals away.

B. The Contractor shall maintain a safe and passable vehicular entrance to all private or public property. The Contractor shall notify the property owner(s) twelve (12) hours in advance of the blocking of an entrance. Do not block an entrance for more than twelve (12) hours at any one time, without approval of the Owner.

C. The Contractor shall notify the owner(s) of animals forty-eight (48) hours prior to working upon the property to allow the owner time to relocate the animals, if possible. The Contractor shall maintain the integrity of the existing fences and gates during the work.

D. Existing lawn, trees, shrubs, fences, utilities, culverts, walls, walks, driveways, poles, signs, right-of-way monuments, mailboxes and the like shall be protected from damage during the work under this contract. Any damage caused to such items shall be repaired or replaced by the Contractor at his expense.

E. Tree and plant roots or branches which may interfere with the work shall be trimmed or cut only with the approval of the Owner. Any trees or plants which are shown to remain and do not interfere with the work but are accidentally damaged by the work shall be repaired or replaced by the Contractor, at his expense.

3.03 UTILITY MAINTENANCE AND COORDINATION

A. Before the work is started, the Contractor shall notify all companies, corporations, municipalities and individuals who own utilities on the construction site, in the right of way or immediately adjacent to the construction area of the work to be performed. The Contractor shall arrange to have the various utilities located and to have them removed or relocated as required, or to determine the method of protection acceptable to the respective owner, if the method of protection is not specified hereinafter. Any cost incurred with removing or relocating utilities shall be borne by the Contractor unless indicated otherwise.

B. The location of existing utilities shown on the drawings was taken in part from existing records and in part from field surveys, and may not represent exact location. The Contractor shall excavate to locate buried utilities far enough in advance of pipeline laying to allow for adjustments in pipelaying both horizontally and vertically.

C. The work shall be coordinated and performed in a manner so that all existing fire hydrants, without exception, shall be accessible at any time during the work.

D. The Contractor shall maintain the existing streams, ditches, drainage structures, culverts and flows at all times during the work. The Contractor shall pay for all personal injury and all property damage which occurs as a result of failing to facilitate drainage.

E. The Contractor shall ascertain the exact location of each existing utility which may interfere with the work. The Contractor may obtain field utility locations by calling Tennessee One Call (1-800-351-1111) Seventy-two (72) hours prior to working in the vicinity of existing utilities. If the utilities fail to locate, a second call shall be made providing an additional three (3) hour notice.

F. The Contractor shall repair or replace any existing sanitary sewer or storm drain utility damaged or misaligned during or caused by the work. All other utilities shall be repaired or replaced by the respective Utility Company(s) at the expense of the Contractor.

G. The Contractor shall coordinate all work within the vicinity of the existing utilities with the respective Utility Company. The work shall be conducted in a manner to avoid unnecessary service interruption and in accordance with the rules and regulations of the respective Utility Company.

H. When the work is approaching an existing utility or structure which may be in conflict with, or connected to, the work, the Contractor shall excavate test pits to verify the location, size, and elevation of the existing utility or structure. By taking this precaution the Contractor may adjust the work or have the existing utility relocated as necessary. Failure to take such precautions may result in the Contractor adjusting the work or having the existing utility relocated, at his expense.

I. When the existing utilities cross the trench excavation, the existing utilities shall be adequately supported and protected from damage as required, specified or directed. All methods for supporting and maintaining the existing utilities shall be subject to the approval of the respective Utility Company and the Owner. Any utilities removed as part of the work, and not indicated to be removed or abandoned, shall be restored using materials and installation equal to the utility's standards.

J. The Contractor shall exercise care to insure that the grade and alignment of the existing utility be maintained and that no joints or connections are disturbed. Backfill shall be carefully placed and compacted to prevent the future damage or settlement to the existing utility.

K. The Contractor shall notify the (Owner)/(Water Utility Company) in writing one week in advance of any required depressurizations or cutoffs of portions of the water system. All valves shall be operated by the Water Utility. The Contractor shall be allowed to make all the taps so indicated in non-pressure condition, with day, the time of day, and the duration of each outage subject to the Owner's approval. The

new water lines shall be installed, tested, and disinfected before individual service connections and before other connections to the existing mains are made. Through coordination with the Owner, the Contractor shall limit the number of persons without water service to the minimum possible number with each outage. Outages shall be of minimum duration and shall not exceed four continuous hours at any time. The Contractor shall notify residences and businesses affected by all outages. Existing water lines indicated to be removed or abandoned shall not be removed from service until all service connections are made to the new water line. The Contractor shall install all new fire hydrants before any existing hydrants are removed.

L. The Contractor shall maintain sewage flow at all times by pumping and/or diversion, or other means acceptable to the City Engineer or his agent. At no time shall the Contractor allow raw sewage to flow out of the sewerage system to adjacent land or waterways, or cause sewage to surcharge the sewerage system such that sewage backs up into any service connection. In the event such backup occurs, the Contractor shall correct and pay for all damage caused. Portions of the existing system may be subject to large, sudden wet weather flows.

3.04 SEWER - WATER RELATION

A. Parallel installation :

1. Water lines shall be laid at least ten feet horizontally from a sewer or sewer manhole whenever possible, the distance shall be measured edge-to-edge.
2. When local conditions prevent a horizontal separation of ten feet, the water line may be laid closer to a sewer or sewer manhole provided that:

    a. The bottom (invert) of the water main shall be at least eighteen inches above the top (crown) of the sewer.

    b. Where this vertical separation cannot be obtained, the sewer shall be constructed of AWWA approved ductile iron water pipe, pressure tested in place at 50 psi without leakage prior to backfilling.

    c. The sewer manhole shall be of water-tight construction and tested in place.

B. Crossing:

1. Water lines crossing sewers shall be laid to provide a separation of at least 18 inches between the bottom of the water line and the top of the sewer whenever possible.
2. When local conditions prevent a vertical separation of 18 inches (see 1 above), the following construction shall be used:

a. Sewers passing over or under water lines shall be constructed of ductile iron or C900 PVC AWWA water pipe.

b. Water lines passing under sewers shall, in addition, be protected by providing:

1) A vertical separation of at least 18 inches between the bottom of the sewer and the top of the water line.

2) Adequate structural support for the sewers to prevent excessive deflection of the joints and the settling on and breaking of the water line.

3) The length of the water line be centered at the point of the crossing so that joints shall be equidistant and as far as possible from the sewer.

C. Sewers or Sewer Manholes:

1. No water pipes shall pass through or come in contact with any part of a sewer or storm drain manhole.

3.05 PROTECTION OF PUBLIC AND PROPERTY

A. The Contractor shall comply with all local, state and federal laws and the Occupational Safety and Health Act in protecting the public, the worksite, and adjacent property from damage. The Contractor shall provide all sheeting, shoring, barricades, trench boxes, warning lights, signs, and fences required for this protection. Erosion control and sediment control shall be provided.

END OF SECTION

SECTION 02 41 00

DEMOLITION

PART 1 GENERAL

1.01 WORK INCLUDED

A. Removal and disposal of designated foundations, pavements, concrete, bridges, culverts and other structures.

1.02 RELATED WORK

A. Specified elsewhere:

1. Section 31 11 00: Clearing and Grubbing
2. Section 31 22 00: Grading and Excavation

PART 2 PRODUCTS

(NOT APPLICABLE)

PART 3 EXECUTION

3.01 PREPARATION

A. Prepare adjacent areas to prevent injury, movement or settlement of structures which are to remain.

B. Make accommodations for pedestrian and vehicular traffic where areas are to be closed.

C. Cap existing utilities at the property line of any buildings to be demolished.

3.02 DEMOLITION

A. Remove foundations of buildings and structures to a depth of not less than one foot below natural ground, except in the construction area where a depth of not less than two feet below subgrade elevation is required.

B. Break up basement floors to prevent water retention.

C. Remove concrete pavement, parking strip, base, curbs, gutters, sidewalks, driveways, etc., and dispose of as follows:

1. Dispose of items below subgrade elevation by no more than two feet.

2. Break items more than two feet below subgrade elevation into sizes not to exceed two feet in maximum dimension and leave in place, unless it interferes with succeeding items of construction.
3. Stockpile ballast, gravel, bituminous pavement or other pavement materials when required.

D. Fill basements or cavities left by structure removal within the prism of construction and below subgrade elevation to the level of the surrounding ground and compact in accordance with Section 31 22 00.

3.03 DEBRIS REMOVAL

A. Promptly remove demolition debris from site.

B. Obtain permission from applicable regulatory authority for disposal of debris to waste disposal site.

3.04 MEASUREMENT AND PAYMENT

A. Measurement of demolition work shall not be made.

B. When provided for on the Bid Form, payment for demolition work shown on the drawings or specified herein shall be by the contract lump sum price. When not provided for on the Bid Form, payment for demolition shall not be made directly, but shall be included in the payment for items with which it is associated.

END OF SECTION

SECTION 03 30 00

CONCRETE WORK

PART 1 GENERAL

1.01 WORK INCLUDED

A. Formwork, complete with shoring, bracing, and anchorage.

B. Concrete reinforcing, complete with supports, spacers and accessories.

C. Cast-in-place Concrete.

1.02 RELATED WORK

A. Specified elsewhere:

1. Section 31 11 00: Clearing and Grubbing
2. Section 31 22 00: Grading and Excavation
3. Section 31 22 16: Base and Subgrade Treatment

PART 2 PRODUCTS

2.01 AGGREGATE MATERIALS

A. Fine Aggregate: Natural sand or other inert materials with similar characteristics conforming to AASHTO M-6 with the following exceptions:

1. Freeze-thaw tests for soundness shall not be required.
2. Wash fine aggregates in the processing operations.
3. Process limestone or dolomite from material which has been scalped to remove quarry fines.
4. The material from which the fine aggregate is processed shall have a maximum wear of 40% by the Los Angeles test.
5. Deleterious substances shall not exceed 0.5% by weight for clay lumps, coal and lignite and 3.0% for material passing the No. 200 sieve and other deleterious substances.

6. Well graded from coarse to fine and, when tested by means of laboratory sieves, conforming to:

Sieve Size	Percent Passing by Weight
3/8”	100
No. 4	95-100
No. 16	60-90
No. 50	10-30
No. 100	0-10
No. 200	0-3

B. Coarse Aggregate: Crushed stone, crushed slag, gravel, chert, or a combination thereof, or other inert materials with similar characteristics, having hard strong durable pieces free from adherent coatings conforming for AASHTO-M-43, except as specified otherwise.

1. Graded to standard sizes between the limits specified conforming to the gradation requirements set forth in the table on the following page:

(AASHTO M-43, Sizes of Coarse Aggregate)

Size No.	Nominal Size Sq. Openings (1)	Amounts Finer Than Each Laboratory Sieve (Square Openings) Percentage by Weight														
		4	3 ½	3	2 ½	2	1 ½	1	3/4	½	3/8	#4	#8	#16	#50	#100
1	3 1/2-1 ½	100	90-100		25-60		0-15		0-5							
2	2 1/2-1 1/2			100	90-100	35-70	0-15		0-5							
24	2 1/2-3/4			100	90-100		25-60		0-10	0-5						
3	2-1				100	90-100	35-70	0-15		0-5						
357	2-No. 4				100	95-100		35-70		10-30		0-5				
4	1 1/2-3/4					100	90-100	20-55	0-15		0-5					
467	1 1/2-No.4					100	95-100		35-70		10-30	0-5				
5	1-1 1/2						100	90-	20-55	0-10	0-5					
56	1-3/8						100	90-	40-75	15-35	0-15	0-5				
57	1-No. 4						100	95-		25-60		0-10	0-5			
6	3/4-3/8							100	90-100	20-55	0-15	0-5				
67	3/4-No.4							100	90-100		20-55	0-10	0-5			
68	3/4-No.8							100	90-100		30-65	5-25	0-10	0-5		
7	1/2-No.4								100	90-100	40-70	0-15	0-5			
78	1/2-No.8								100	90-100	40-75	5-25	0-10	0-5		
8	3/8-No.8									100	85-100	10-30	0-10	0-5		
89	3/8-No.16									100	90-100	20-55	5-30	0-10	0-5	
9	No.4-No.16										100	85-100	10-40	0-10	0-5	
10	No.4-0(2)										100	85-100				10-30

(1) In inches, except where otherwise indicated. Numbered sieves are those of the United States Standard Sieve Series.
(2) Where Size No. 10 (Screenings) is specified in asphalt pavement design the per cent passing the No. 4 sieve shall be 90 -100 and the percent passing the No. 200 sieve shall be from 5-16.

2. Furnish coarse aggregate for concrete base and pavement in two sizes: No. 4 and No. 67. The two sizes shall be manufactured to produce Size 467, when combined in the proper proportions at the batching plant.

3. Coarse aggregate for structural concrete shall be Size No. 57 or Size No. 67, as specified or directed.

4. Conform to AASHTO M-80, except that the amount of deleterious substances shall not exceed the following limits:

	Maximum Percent by Weight
a. Soft or non-durable fragments (fragments which are structurally weak, such as shale, soft sand-stone, limonite concretions, gypsum, weathered schist or cemented gravel)	3.0
b. Coal or lignite	1.0
c. Clay lumps	0.25
d. Material passing the No. 200 sieve	0.75
e. Thin or elongated pieces (length greater than five (5) times average thickness)	10.0
f. Other local deleterious substances	1.0
g. Items a, b, c, d, and f, combined shall not exceed 5.0%	

B. Aggregate Test Methods: By the following AASHTO tests, when required:

Sampling	T-2
Material passing 200 sieve	T-11
Clay lumps	T-112
Coal and lignite	T-113
Sieve analysis	T-27
Soundness (sulfates)	T-104
Soundness (freezing & thawing)	T-103

1. For fine aggregate add:

Organic impurities	T-21
Mortar-making properties	T-71
Light weight particles	T-149

2. For coarse aggregate add:

Percentage of wear	T-96
Unit weight (slag)	T-19

2.02 CEMENT

A. Use portland cement unless otherwise specified.

B. Portland Cement: AASHTO M-85 or ASTM C-150.

1. Test by the following AASHTO methods, when required:

Soundness	T-107
Sampling	T-127
Chemical Analysis	T-105
Fineness:	
Turbidimeter	T-98
Air permeability	T-153
Time of Setting:	
Gillmore needles	T-154
Vicat needles	T-131
Air Content of Mortar	T-137
Normal Consistency	T-129
Tensile Strength	T-132
Compressive Strength	T-106
False Set	T-186

C. Portland Blast Furnace Slag Cement: AASHTO M-151 or ASTM C-205.

1. Test by the following AASHTO methods, when required:

Sampling	T-127
Chemical Analysis	T-105
Fineness by Wet Sieving	T-192
Time of Setting:	
Gillmore needles	T-154
Vicat needles	T-131
Air Content of Mortar	T-137
Normal Consistency	T-129
Tensile Strength	T-132
Compressive Strength	T-106
False Set	T-186

D. Portland Blast Furnace Slag Cement: AASHTO M-151 or ASTM C-205.

1. Test by the following AASHTO methods, when required:

Sampling	T-127
Chemical Analysis	T-105
Fineness by Wet Sieving	T-192
Time of Setting:	
Gillmore needles	T-154
Vicat needles	T-131
Air Content of Mortar	T-137
Compressive Strength	T-106
Tensile Strength	T-132
Heat of Hydration	ASTM C-186

2.03 WATER

A. Either potable or reasonably clean and free of oil, salt, acid, alkali, sugar, vegetable matter, sewage or other injurious foreign matter. Test water not known to be potable in accordance with AASHTO T-26.

2.04 CHEMICAL ADDITIVES:

A. Conform to AASHTO M-194, ASTM C-494, ASTM C-260, and AASHTO M-154 covering the following 6 types:

1. Type A - Water reducing admixtures
2. Type B - Retarding admixtures
3. Type C - Accelerating admixtures
4. Type D - Water reducing and retarding admixtures
5. Type E - Water reducing and accelerating admixtures

2.05 AIR-ENTRAINING ADMIXTURES

A. ASTM C-260, CSA A-23, or AASHTO M-154.

2.06 CONCRETE PROPORTIONING

A. Base Proportioning on a predetermined cement content.

B. Adjust the quantity of water to meet slump requirements, not exceeding the maximum allowed.

C. Unless otherwise specified, air entrainment shall be 5% with a tolerance of plus 3% or minus 2%.

D. Submit a mix design to City Engineer or his agent for approval prior to commencing

work.

E. Collect compression test specimens using ASTM C-31 or AASHTO T-23.

F. Test compression strength specimens using ASTM C-39 or AASHTO T-22.

G. Test slump using ASTM C-143 or AASHTO T-119.

H. Structural Concrete Proportioning Table

Type of C.A.	Type of F. A.	Dry Agg. Per Cement Sack CAFA		Nominal Yield cu.ft. Per sack	Maximum Water Gal. Per sack	Minimum sacks cement per cu. Yd. Concrete
Air Entrained Concrete Based on 5% Air						
CLASS P						
Gravel	Natural	256	149	3.86	5.0	7.0
Limestone	Limestone	266	163	3.86	5.3	7.0
Limestone	Natural	266	157	3.86	5.2	7.0
CLASS A						
Gravel	Natural	275	161	4.09	5.3	6.6
Limestone	Limestone	286	175	4.09	5.6	6.6
Limestone	Natural	286	169	4.09	5.5	6.6

Type of C.A.	Type of F. A.	Dry Agg. Per Cement Sack CAFA		Nominal Yield cu.ft. Per sack	Maximum Water Gal. Per sack	Minimum sacks cement per cu. Yd. Concrete
Non- Air Entrained						
CLASS P						
Gravel	Natural	250	165	3.86	5.8	7.0
Limestone	Limestone	250	180	3.86	5.8	7.0
Limestone	Natural	259	174	3.86	5.8	7.0
CLASS A						
Gravel	Natural	269	178	4.09	6.0	6.6
Limestone	Limestone	280	194	4.09	6.0	6.6
Limestone	Natural	280	187	4.09	6.0	6.6

Notes: Specific Gravity of Gravel Based on 2.52
Specific Gravity of Natural Sand Based on 2.60
Specific Gravity of Limestone Based on 2.70
Specific Gravity of Limestone Sand Based on 2.70
Gravel Mixes, 36% F.A. - Limestone Mixes, 38% F.A. for Air-Entrained Concrete
Gravel Mixes, 39% F.A. - Limestone Mixes, 41% F.A. for Non-Air Entrained Concrete

2.07 CONCRETE CLASSIFICATIONS

A. Class A Concrete (Structures): Unless otherwise specified and shown on the Plans, all concrete shall be Class A.

1. Fine Aggregate: Proportion by dry weight of fine to coarse aggregates between 30-45%.
2. Coarse Aggregates: Sizes as follows:

   Size No. 57 - Structural Concrete
   Size No. 57 or No. 67 - Prestressed and precast concrete

3. Minimum Compressive Strength: 28 day, 4000 psi, average any 3 cylinders.
4. Slump: 1 to 3 inches for mass concrete and heavy reinforced section; 2 to 4 inches for slabs, columns, girders, walls, etc. Vary consistency to meet job requirements, provided there is no increase in the maximum water-cement ration specified in the mix design.
5. Mixing Water: Deduct the moisture content of the aggregate from the amount of mixing water required.

B. Class "P" Concrete (Base and Pavement):

1. Fine Aggregate: Do not use sand manufactured from limestone for traffic lane pavements.
2. Coarse Aggregate: Size No. 67.
3. Minimum Compressive Strength: 14 day, 3500 psi, average of any 3 cylinders.
4. Slump: 1/2 - 1-1/2 inches, workable consistency.
5. Mixing Water: Include surface moisture but not moisture absorbed by the aggregate.

C. Class B Concrete: Use for anchors, kickers, encasement for pipelines, sub-foundations, mass footings, and fill, unless otherwise specified.

1. Fine Aggregate: Proportion by dry weight of fine to coarse aggregates between 30-45%. Test for potential alkali reactivity per ASTM C-289-71. Use natural river sand or specially approved manufactured sand, only.
2. Coarse Aggregate: Size No. 57.
3. Minimum Cement Content: 5.0 bags (470 lbs) per cubic yard.
4. Minimum Compressive Strength: 28 day, 2500 psi, average of any 3 cylinders
5. Slump: 5 to 8 inches for pipe encasements and 2 to 4 inches in sub-foundations and other specified areas.
6. Mixing Water: Maximum amount of water per 94 lb. bag of portland cement shall be 6.5 gallons. Deduct the moisture content of the aggregate from the amount of water required.

D. Testing of materials for concrete shall be done by an independent commercial testing laboratory approved by the City Engineer or his agent. Tests shall be arranged and be paid for by the contractor. Reports of tests shall be promptly submitted to the City Engineer or his agent.

2.08 CONCRETE MIXING

A. Obtain approval of all equipment prior to commencement of concrete placing operations.

B. Mix and handle concrete in accordance with the general requirements of the TDOT.

C. Give City Engineer or his agent free access to the mixing site for inspection of equipment and mixing operations.

D. Check and compensate for, if applicable, moisture content of aggregates prior to mixing.

E. Mix batches only in quantities required for immediate use.

F. Remove from the project site, all concrete reaching the site in a preset condition or which fails slump requirements.

G. Project Site and Central Plant Mixers:

1. Furnish equipment sufficient to accurately measure, weigh and control all materials entering the mixer.
2. Discharge the entire batch from the mixer prior to recharging.
3. Do not exceed the mixer capacity rating.
4. Maintain drum rotation peripheral speed of 200 feet per minute.
5. Start mixing time when all solid materials are in mixer drum.
6. Mix water before 1/4 of the mixing time has elapsed.
7. Mix a minimum of 1-1/2 minutes for the first cubic yard; add 15 seconds for each cubic or fraction of a cubic yard thereafter.
8. For a Project Site Mixer: furnish equipment necessary for quality control at least equal to that obtained in an acceptable central plant.
9. For Central Plant Mixer: furnish loading tickets showing class of concrete, project name and number, time of batching, and batch weights of each material to City Engineer or his agent prior to placing concrete.

H. Truck Mixers:

1. Provide watertight, revolving drum truck mixers which maintain a uniform distribution of materials throughout the mix.
2. First 30 seconds of mixing must be done at the proportioning plant.
3. Measure, weigh and control solid materials at the proportioning plant.
4. Equip truck mixer with a mixing water tank capable of accurately measuring water.
5. All water may be added at project site to prevent pre0set conditions.
6. Mix a minimum of 50 revolutions after all ingredients are in the drum at a minimum speed of 4 rpm. and a maximum peripheral drum speed of 225 feet per minute.
7. Mix a maximum of 150 revolutions at speeds in excess of 6 rpm.

2.09 TRANSPORTING

A. Transport only in approved truck mixers, truck agitators, or non-agitating trucks.

B. On site mixing in the truck shall be approved in hot weather or when the logistics of material handling requires it.

C. If strength or slump tests are not found to be uniform, truck mixing shall not be allowed.

2.10 CONCRETE CURING MATERIALS

A. Cure all concrete surfaces not protected by forms by keeping the surface moist or by the application or a membrane-forming curing compound.

B. Initially, wet cure for a period of at least 24 hours. During the initial curing period, keep the surface moist and protected by burlap mats or other approved materials.

C. Water: Water used in curing portland cement concrete shall not contain any substance which may damage the surface of the concrete.

D. Sand and Earth: Free of stones or other materials which may damage the surface of the concrete.

E. Liquid Membrane-Forming Compounds: AASHTO M-148.

F. Polyethylene Sheeting: AASHTO M-171.

G. Burlap: AASHTO M-182, Class 3 or 4.

H. Straw: Reasonably clean and free of any material which may damage the surface of the concrete.

2.11 EXPANSION AND CONSTRUCTION JOINTS

A. Preformed Bituminous Fillers: AASHTO M-33.

B. Hot-Poured Elastic Type: AASHTO M-173.

C. Preformed Elastomeric Compression Joint Seals: AASHTO M-260.

2.12 REINFORCEMENT STEEL

A. Includes plain and deformed steel bars, cold-drawn steel wire or fabricated forms of these materials.

B. Bar Reinforcement for Concrete Structures:

1. Steel bars for reinforcement of concrete structures shall be billet steel bars conforming to the requirements of ASTM A-615, grade 40 or 60.
2. Reinforcing bars shall be deformed and shall have minimum section areas as shown:

Sizes and Areas of Reinforcing Bars Dimensions are for Round Sections				
Bar Designation Number see note (a)	Nominal Diameter in Inches	Cross-Sectional Area in Sq. In.	Perimeter Inches	Weight Pounds per Ft.
#2	.250	.05	.786	.167 see note (b)
#3	.375	.11	1.178	.376
#4	.500	.20	1.571	.668
#5	.625	.31	1.963	1.043
#6	.750	.44	2.356	1.503
#7	.875	.60	2.749	2.044
#8	1.000	.79	3.142	2.670
#9	1.128	1.00	3.544	3.400
#10	1.270	1.27	3.990	4.303
#11	1.410	1.56	4.430	5.313

NOTES:

(a) Bar numbers denote nominal diameters of round bars in eights-of-inch. The nominal diameter of a deformed bar is equivalent to the diameter of a plain bar having the same weight per linear foot as the deformed bar.

(b) 1/4 inch diameter bar in plain round only.

C. Dowel Bars: Plain steel bars.

D. Tie Bars: Deformed in accordance with ASTM A-305 except that No. 2 bars may be either deformed or plain. Tie bars which are to be bent during construction shall conform to ASTM C-615 grade 40.

E. Welded Steel Wire Fabric: Welded steel wire fabric for concrete reinforcement shall:

1. Conform to the requirements of ASTM A-185 for smooth wire or ATN A-47 for deformed wire.

2. Wire used in the manufacture of welded wire fabric shall conform to Cold Drawn Steel Wire ASTM A-82.

3. When wire is ordered by size number, the following relationship between size number, diameter, and area shall apply:

Size No.	Nominal Diameter (in)	Nominal Area (in^2)
W31	0.628	0.31
W30	0.618	0.300
W28	0.597	0.280
W26	0.575	0.260
W24	0.553	0.240
W22	0.529	0.220
W20	0.505	0.200
W18	0.479	0.180
W16	0.451	0.160
W14	0.422	0.140
W12	0.391	0.120
W10	0.357	0.100
W8	0.319	0.080
W7	0.299	0.070
W6	0.276	0.060
W5.5	0.265	0.055
W5	0.252	0.050
W4.5	0.239	0.045
W4	0.226	0.040
W3.5	0.211	0.035
W3	0.195	0.030
W2.5	0.178	0.025
W2	0.160	0.020
W1.5	0.138	0.015
W1.2	0.124	0.012
W1	0.113	0.010
W0.5	0.080	0.005

F. Fabricated Materials: Steel bar, rod mats or welded steel fabric shall conform to ASTM A-184 and A-185.

G. Metal Support: Support for tie bars and reinforcing bars shall conform to current CRST Standards.

H. Expansion Dowel Caps: Use 32 gauge sheet metal indented to provide a limiting stop for a minimum 1" movement of the dowel bar.

PART 3 EXECUTION

3.01 PREPARATION

A. Clear construction area in accordance with Section 31 11 00.

B. Prepare base and/or subgrade in accordance with Section 31 22 16.

3.02 FORMWORK

A. Erect forms:

1. True to line, grade and cross-section.
2. Mortar tight and sufficiently rigid to prevent distortion from the pressure of the concrete and construction operations.
3. Held in place with studs or uprights and walling, sufficiently braced and tied to prevent the opening of formwork joints.

B. Chamfer all exposed edges with 3/4" strips which are straight, of uniform width and dressed.

C. Remove wood devices to separate forms before placing concrete within 4 inches of such devices.

D. Form Lumber:

1. Dressed at least on 1 side and 2 edges.
2. Plywood or similar material for forms may be used if they are substantial, of uniform thickness, and are mortar tight when in position.

E. Construct metal ties or anchors to permit removal to a depth of at least 1" from the face without injury to the concrete.

F. Leave openings along the bottom of walls to permit cleaning prior to placing concrete. Close such openings prior to placing concrete.

G. Treat forms with an approved coating to prevent the adherence of concrete. Do not use any material which may adhere to or discolor the concrete.

H. Do not use metal forms which do not line up properly, are not true to shape or which have rust, grease or other foreign matter on them.

3.03 FALSEWORK

A. Support false work on sills resting on rigid solid rock foundations, driven piles or earth borne footings.

B. Do not use earth borne footing if, in the Design Engineer's opinion, the soil cannot support the superimposed loads.

C. Construct false work to support the forms without distortion or settlement.

D. Provide "tell-tales" to observe false work movement.

3.04 REINFORCEMENT

A. Accurately bend, without heating, reinforcing steel to the forms and dimensions shown on the drawings, if required.

B. Bend in one plane, unless otherwise specified.

C. Uncoated bars of 3/4" or less which have single bends may be bent in the field. Perform all other bending in the shop prior to shipment.

D. Furnish reinforcement in full lengths without splices as shown on the drawings, unless otherwise indicated.

E. Where splicing is approved:

1. For bars, rigidly clamp splices with at least 2 metal clips placed 3 inches from the ends or securely wire in place.
2. For fabric, overlap sheets not less than 12 inches and securely wire the overlapped sections.

F. Clean all reinforcement of all foreign matter which may reduce the bond, prior to placing concrete.

G. Accurately place reinforcement and firmly hold in place as shown on the drawings:

1. Fasten with wire clips or wire at each intersection.
2. Securely space reinforcement from forms and adjacent reinforcement with precast concrete or mortar blocks, metal spacers or approved devices.
3. Do not use wood, brick or gravel for spacers.

H. Obtain approval of reinforcement from City Engineer or his agent prior to placing concrete.

3.05 DRAINAGE AND WEEP HOLES

A. Construction in the manner shown on the drawings.

B. Backfill structures, when required, by placing a 1 foot by 1 foot wire basket filled

with coarse aggregate of size 7, 8, 57, 67, 68, or 78 of T.D.O.T. specifications.

3.06 EXPANSION JOINTS

A. Use expansion devices as shown on the drawings.

B. Securely anchor in position, true to line and grade.

C. Chamfer joint edges as shown on the drawings.

D. Construct open joints using forms permitting removal without injury to concrete.

E. Construct filled joints with premolded filler, 1/2" thick.

F. Thoroughly clean and seal joints when required.

3.07 PLACING CONCRETE

A. Obtain approval of forms and reinforcement prior to placing concrete.

B. Coat forms immediately before placing.

C. Place concrete only during daylight hours.

D. Thoroughly work concrete with approved tools to force aggregate from the surface and bring mortar against the forms to produce a smooth finish, free of water, air pockets or honeycomb.

E. Correct forms bulging or settlement before proceeding with placement.

F. After the initial set and prior to final set, do not jar or strain projecting reinforcement.

G. Place concrete to avoid segregation of materials and displacement of reinforcement.

H. Compact the concrete using mechanical vibrators:

1. Work concrete around reinforcement, fixtures and into corners and angles of the forms.
2. Do not prolong to the point where segregation occurs.
3. Where necessary supplement by hand spading.

I. Feather-edge construction joints are not permitted, nor are transverse or longitudinal joints through spans, except where specified.

J. Do not stop or temporarily discontinue concreting within 18 inches of any finished

surface unless an 18 inches thick coping is provided.

K. In resuming work, draw forms tightly against concrete faces.

L. Clean and roughen concrete surfaces to be bonded and soak with clean water prior to proceeding with placement.

3.08 REMOVAL OF FORMS AND FALSEWORK

A. Remove forms for vertical surfaces not carrying loads in from 12 to 48 hours.

B. In cold, damp or freezing weather, leave forms in place until the concrete has sufficiently set.

C. Remove forms with care not to mar or strain the concrete.

D. Remove or cut metal form ties in a neat workmanlike manner.

E. Fill all holes with cement mortar mixed in the same proportions as the concrete used.

F. Leave forms and supports under concrete structure until:

1. A tested compressive strength of 3000 psi is attained.
2. Minimum of 7 days not counting days with temperatures below 40 degrees F. or 21 days whichever occurs first.

G. Leave forms until all concrete in continuous slabs have been placed a sufficient time as stipulated above.

3.09 DEFECTIVE CONCRETE

A. Remove and replace all concrete which:

1. Is bulged, uneven or shows honeycombing which cannot be repaired.
2. Has a 28-day strength less than the minimum specified.

3.10 FINISHING CONCRETE

A. Finish concrete surfaces immediately after form removal.

B. Minimum Finish: Class I for all surfaces.

C. Class II or Applied Texture Finish for:

1. Curb tops and outside faces
2. Sidewalk slabs

3. Retaining, wing and end walls
4. Those surfaces shown on the drawings

D. Class I, Ordinary Surface Finish:

1. Remove all fins and irregularities where surfaces are to be exposed or waterproofed.
2. Clean, saturate with water and point and true all holes, honeycombs and other defects.
3. Mortar for pointing shall be mixed in the proportions of the concrete class used and shall not be more than 30 minutes old.
4. Tool and clean mortar and concrete from all joints.
5. Leave joint filler exposed for its full length with clean and true edges.
6. Rub all surfaces not repairable as specified for Class II finishes.

E. Class II, Rubbed Finish:

1. Start concrete rubbing as soon as conditions permit.
2. Keep concrete saturated until starting rubbing.
3. Allow pointing mortar to thoroughly set.
4. Rub surfaces using a wetted wooden block or a medium coarse carborundum stone.
5. Rub until all irregularities have been removed, all voids filled and a uniform surface has been obtained.
6. Leave the paste produced by rubbing in place.
7. Do not brush finish or paint with grout.
8. Rub final finish with a fine carborundum stone and water until the entire surface is of uniform texture and color.
9. Rub with burlap to remove loose powder after the surface has dried.

F. Applied Texture Finish:

1. Initially prepare surface as for Class I.
2. Remove all foreign substances and surface moisture.
3. Shield and mask surfaces not receiving the coated finish.
4. Cracks over 1/8 inches wide are to be veed out and filled.
5. Apply the textured finish by spray only at the rate of 45 square feet per gallon with heavy duty spray equipment.
6. The finish color shall be as near as practicable to rubbed concrete finish color.

3.11 CURING

A. In all cases curing shall have prior right to all water.

B. Do not expose the concrete for more than one-half hour between stages of curing or during the curing period.

C. Immediately after finishing when marring of the concrete shall not occur, cover and cure the entire surface of the newly placed concrete in accordance with one of four methods.

D. Completely cover all surfaces and edges with the curing substance.

E. Maintain the curing substance in place for 72 hours after placement of concrete.

F. Cotton or Burlap Mats:

1. The mats used shall extend at least twice the thickness of the pavement beyond the edges of the slab.
2. Prior to being placed, saturate the mats thoroughly with water.
3. Place and weight down the mats to cause them to remain in intimate contact with the surface.
4. Keep the mats fully wetted during curing, unless otherwise specified.

G. Waterproof Paper:

1. Lap the units at least 18 inches.
2. Place and weight down to cause it to remain in intimate contact with the surface covered.
3. The paper shall extend beyond the edges of the slab at least twice the thickness of the pavement.
4. If laid longitudinally with paper not manufactured in sizes which provide this width, cement together in such a manner that the joints do not open up or separate during the curing period.
5. Wet the surface of the pavement prior to placing paper.

H. Impervious Membrane Method:

1. Spray the surface uniformly with white pigmented curing compound immediately after finishing the surface and before the set of the concrete has taken place.
2. If the pavement is cured initially with jute or cotton mats, apply upon removal of the mat.
3. Do not apply curing compound during rainfall.
4. Apply the curing compound under pressure by mechanical sprayers at the rate recommended by the manufacturer but not less than one gallon to each 150 square feet.
5. The spraying equipment shall be of the fully atomizing type equipped with a tank agitator.
6. At the time of use, thoroughly mix the pigment to uniformly disperse it throughout the vehicle.
7. Continuously stir the compound by effective mechanical means.

8. Hand spraying of odd widths, shapes or concrete surfaces exposed by the removal of forms shall be permitted.
9. Do not apply the curing compound to the inside faces of joints to be sealed.
10. Should the film become damaged during the curing period, repair the damaged portions immediately with additional compound.
11. Upon removal of side forms, protect exposed areas immediately by applying curing treatment equal to that provided for the surface.

I. White Polyethylene Sheeting:

1. Lap the units at least 18 inches.
2. Place and weight down to cause it to remain in intimate contact with the surface covered.
3. The sheeting used shall extend beyond the edges of the slab at least twice the thickness of the pavement.
4. Wet the surface of the pavement prior to placing the sheeting.

J. Curing in Cold Weather:

1. When concrete is being placed and the air temperature may be expected to drop below 35 degrees F., sufficiently supply suitable blanketing material along the work.
2. Any time the temperature may be expected to reach the freezing point spread the material over the pavement to a sufficient depth to prevent freezing of the concrete.
3. Take care not to mar the concrete surface.
4. Maintain such protection not less than 5 days.
5. This method is in addition to other curing methods specified above rather than being a substitute therefore.
6. The Contractor shall be responsible for the quality and strength of concrete placed during cold weather, and any concrete injured by freezing action shall be removed and replaced at his expense.

3.12 MEASUREMENT AND PAYMENT

A. Concrete shall be measured for payment by the cubic yard of concrete placed, finished, cured and accepted. Concrete used and paid for in other items of work shall not be measured for payment here.

B. If provided for on the Bid Form, concrete as above stipulated shall be paid for at the Contract unit price per cubic yard for the various classifications shown on the Bid Form. If not provided for on the Bid Form, payment for concrete encasement shall not be made directly, but shall be included in the payment for the items with which it is associated.

END OF SECTION

SECTION 03 40 00

PRECAST CONCRETE

PART 1 GENERAL

1.01 WORK INCLUDED

A. The work shall include providing all equipment, materials, labor and services required to construct and install precast concrete structures and items as indicated on the plans and in accordance with the supplementary drawings.

1.02 RELATED WORK

A. Specified elsewhere:

1. Section 01 11 13: Summary of Work
2. Section 05 56 00: Metal Castings
3. Section 31 23 33: Trenching, Backfilling, and Compaction
4. Section 33 05 15: Pipe, Joints, Fittings, and Appurtenances
5. Section 33 30 00: Sanitary Sewer Systems

1.03 QUALITY ASSURANCE

A. The materials and methods of construction for precast concrete shall comply with the latest revisions of the applicable American Society for Testing Materials (ASTM) and the Tennessee Department of Transportation (TDOT) standards. Precast structures and items shall conform to the details on the drawings and herein.

B. Comply with all codes, laws, ordinances and regulations of governmental authorities including, but not limited to, local municipalities and sanitary districts having jurisdiction over this part of the work.

1.04 SUBMITTALS

A. Submit for approval at least 5 copies of the shop drawings showing all dimensions, reinforcement, inserts and all other details necessary for the fabrication and installation of all precast concrete structures and items, in accordance with Section 01 33 00.

1.05 REFERENCES

A. Tennessee Department of Transportation (TDOT) - Road and Bridge Specifications and Standard Details; latest revisions.

B. American Society for Testing Materials (ASTM); latest edition:

1. C62: Specification for Building Brick (Solid Masonry Units Made from Clay or Shale)
2. C76: Standard Specification for Reinforced Concrete Culvert, Storm Drain, and Sewer Pipe
3. C144: Standard Specification for Aggregate for Masonry Mortar
4. C150: Standard Specification for Portland Cement
5. C270: Specification for Mortar for Unit Masonry
6. C443: Standard Specification for Joints for Circular Concrete Sewer and Culvert Pipe, Using Rubber Gaskets
7. C478: Standard Specification for Precast Reinforced Concrete Manhole Sections
8. C923: Specification for Resilient Connectors Between Reinforced Concrete Manhole Structures, Pipes and Laterals

PART 2 PRODUCTS

2.01 ACCEPTABLE MANUFACTURERS

A. Precast structures shall be manufactured by the Precast Inc., Hanson Concrete Products Co., Inc., Permatile, Concrete Specialties, Inc. or equal.

2.02 STRUCTURES

A. Manholes:

1. Manhole base, riser, taper and top or spacer units shall be precast reinforced concrete manufactured in accordance with ASTM C 478 and TDOT Section 611, with O-ring joints conforming to ASTM C443 or with flexible butyl gasket, CS-302 by Concrete Sealants, Inc., E-Z Stik by Concrete Products Supply or equal.
2. Each unit shall have no more than 2 holes for installation and/or handling. All holes shall be plugged with mortar or rubber stoppers, upon completion of manhole installation.
3. Manhole unit joints shall be made with either flexible butyl sealants or gaskets, at the Contractor's option. Flexible butyl sealants shall be manufactured by Concrete Sealants, Inc. (CS-302) or equal and flexible butyl gaskets shall be manufactured by Concrete Products Supply Company (E-Z STIK) or equal. The gaskets or sealants shall be installed and the joint made in accordance with the recommendations of the manufacturer(s).
4. Base units shall be tub or monolithic type with walls which extend above the top of the largest inlet or outlet pipe. Base units shall have a minimum inside diameter of 4 feet for storm drain pipe with an inside diameter of 12 to 36 inches and 5 feet for storm drain pipe with an inside diameter of 42 to 54 inches, unless specified or indicated otherwise. Sanitary sewer manholes shall have an inside diameter of 4 feet. Minimum wall thickness shall be 5 inches.

Concrete shall be minimum compressive strength of 4,000 psi at 28 days.

5. Manhole top units shall be the eccentric taper type, at least 3 feet in height, or flat top where indicated.
6. Manholes shall be constructed to the required height to insure that the top of the frame and cover is set at the finished grade, unless specified or indicated otherwise. Spacer rings or other means up to 8 inches shall be provided to allow adjustment to final pavement surface, as required, at the time of paving. Maximum wall thickness shall be 5 inches. Concrete shall be minimum compressive strength of 4,000 psi at 28 days. Brackets and anchor bolts, when indicated, to bolt sections of manhole sections together shall be stainless steel. Watertight manholes shall have the cone bolted with three 8" x 2" x ¼" stainless steel straps with two ½" stainless steel anchor bolts to the riser below.
7. Sanitary sewer pipe connections to sanitary manholes shall be made with flexible joints and shall conform to ASTM C923, latest revision. The flexible joints shall be a rubber gasket cast in the manhole base and a field installed gasket wedge equal to PS-10, PSX-Series 6, or Press Wedge II, manufactured by Press-Seal Gasket Corporation, or the Flexible Manhole Sleeve as manufactured by Lock Joint Pipe, Division of Interpace, the Fernco "CMA" concrete manhole adapter as manufactured by the General Engineering Company, Frederick, Maryland, A-LOK Manhole Pipe Seal, or KOR-N-SEAL system by National Pollution Control Systems, Inc. Ribbed pipe shall be connected to manholes with KOR-N-SEAL system, using section of smooth exterior wall pipe at the manhole.

B. Invert Shaping:

1. The invert channels of manholes, inlets and junction boxes shall be smooth and semi-circular in shape sized to match the inlet and outlet pipes and sloped to provide a smooth transition between the inlet and outlet pipes. Changes in direction of flow shall be made with a smooth curve channel with a radius as large as the base permits.
2. The invert channels and benches may be formed directly in the concrete base unit of the manhole or may be constructed with brick and mortar. In no case shall the trough thickness be less than 3" as measured from the concrete base to the outlet pipe invert. The benches shall slope a minimum of 1 inch per foot toward the invert channel. The surface of the channels and benches shall be concrete.

3. Modified shaping, defined as a channel 2/3 the height of the largest pipe, shall be acceptable.

2.03 CONNECTIONS

A. Pipes entering precast structures shall be securely set in the precast opening at the proper elevation and grade, using materials in Section 33 05 15.

PART 3 EXECUTION

3.01 INSTALLATION

A. The items shall be installed in accordance with the manufacturer's recommendations, the drawings and details, and as specified hereinafter.

END OF SECTION

SECTION 05 56 00

METAL CASTINGS

PART 1 GENERAL

1.01 WORK INCLUDED

A. The work shall include providing all equipment, materials, labor and services required to construct and install all metal castings and miscellaneous metals specified and indicated.

1.02 RELATED WORK

A. Specified elsewhere:

1. Section 03 40 00: Precast Concrete
2. Section 31 23 33: Trenching, Backfilling, and Compaction

1.03 QUALITY ASSURANCE

A. The materials and methods of construction for metal castings shall comply with the latest revisions of the applicable American Society for Testing Materials (ASTM) and the Tennessee Department of Transportation (TDOT) standards.

B. Comply with all codes, laws, ordinances and regulations of governmental authorities including, but not limited to, local municipalities and sanitary districts having jurisdiction over this part of the work.

C. Deliver the metal castings to the work site at the time in which such can be set in place and secured without delay.

1.04 SUBMITTALS

A. Submit shop drawings concerning all materials in this section in accordance with Section 01 33 00.

1.05 REFERENCES

A. Tennessee Department of Transportation (TDOT) - Standard Specifications for Roads and Structures and Standard Details; latest revisions.

B. American Society for Testing Materials (ASTM), latest revision:

1. A48: Standard Specification for Gray Iron Casting

PART 2 PRODUCTS

2.01 MANHOLE, VAULT, AND DROP INLET STEPS

A. Steps shall be steel encapsulated in corrosion resistant rubber or copolymer polypropylene plastic, as manufactured by Delta Pipe Products (WEDG-LOK), Model #PS1-PF as manufactured by M. A. Industries, or ML-10 by American Step Company.

B. Steps shall be in accordance with the dimensions and capable of withstanding the loads specified in ASTM C478, or 300 pounds when extended 6" from the manhole surface, whichever is greater, and shall be designed for installation in a sanitary sewer.

C. Steps shall be required in all structures with a depth greater than 4 feet. Steps shall be vertically aligned and uniformly spaced for the entire depth of the structure. Steps shall be located in the structures so as to land upon a bench.

D. Steps shall be vertically spaced no greater than 16 inches on center. Step width shall be a minimum of 10 inches and a maximum of 16 inches. Steps shall protrude from the wall of the structure a minimum of 5 inches and a maximum of 7 inches and shall have a drop front and a grooved step surface.

E. Steps shall be grouted or cast into the walls of the structure and any portion of aluminum step embedded in concrete shall be coated with asphalt.

2.02 MANHOLE, FRAMES AND COVERS

A. Cast iron frames and covers shall be located over each manhole indicated on the plans. Manhole frames and covers shall be set so the top of the cover shall be at the finished grade, unless specified or indicated otherwise.

B. Standard frames and covers shall comply with the detail drawings and shall have a minimum opening diameter of 24 inches. Manhole frames shall weigh 260 pounds, minimum, and covers shall weigh 135 pounds, minimum. Manholes shall have lifting bars only. Frames shall be bolted to concrete of manhole. Standard frames and covers shall be East Jordan Iron Works, Inc. V-1312, or equal.

C. Manhole and drop inlet frames and covers shall be commercially machined and cast in accordance with the dimensions, sizes and notes shown on the supplementary drawings. Covers for sanitary sewers shall be solid lid, and shall conform to the Standard Detail, and shall have "SANITARY SEWER" cast in their surface

D. All materials for frames and covers shall be Number 1 Foundry Pig Iron cast in accordance with ASTM A48 for Class 30 gray iron. The cast shall be uniform in

quality, free from blowholes, porosity, hard spots, shrinkage distortion or other defects.

E. Casting shall be manufactured true to pattern with component parts fitted together in a satisfactory manner. Casting tolerances shall be +/-1/16", and shall be interchangeable. The frames and covers shall have machined bearing surfaces to prevent rocking or rattling under traffic.

F. All castings for inlet frames and covers shall be smooth and well-cleaned. All manholes shall have an asphalt seal such as #301 pipe joint filler by Overall Paint, Inc., or equal between the frame and concrete to assure a proper seal.

G. Watertight manhole frames and covers shall be U.S. Foundry & Mfg. Corporation East Jordan Iron Works, Inc. V-1312, or equal, shall be anchor bolted to the concrete manhole structure, shall have "SANITARY SEWER" cast into their surface.

PART 3 EXECUTION

3.01 INSTALLATION

A. Items shall be installed in accordance with the manufacturer's recommendations and as specified hereinafter.

END OF SECTION

SECTION 26 05 00

ELECTRICAL WORK

PART 1 GENERAL

1.01 WORK INCLUDED

A. The complete electrical system for lighting, power, control, and other purposes, as herein specified and/or indicated on the drawings, consisting generally of but not limited to: raceways; fittings; boxes; conductors; switch gear; panel boards; transformers; circuit breakers; switches; wiring devices; lighting fixtures and lamps; motor controls; all necessary electrical connections to equipment furnished under other sections of the specifications and all cutting and patching required for the electrical work.

B. The work required under this Section includes all work necessary to provide complete and coordinated electrical services from the local utility company at each site.

1.02 CODES AND FEES

A. All work shall be installed in accordance with the applicable provisions of the local codes, the National Electrical Code, and the National Electrical Safety Code.

B. All electrical materials shall have Underwriter's approval where applicable, and shall be so labeled where UL labeling is customary.

1.03 PROTECTION AND CLEANING

A. Work shall be protected at all times. Conduit openings shall be closed with caps or plugs until permanent connections are made. Fixtures and equipment shall be covered, if necessary, to protect against dirt, water, chemical or mechanical damage or defacement. The installation of fixtures liable to damage shall be deferred by the Architect.

1.04 OPERATING INSTRUCTIONS

A. Furnish the services of competent personnel to instruct the Owner's personnel in the proper operation and maintenance of all equipment.

B. Furnish and deliver to the Owner 3 sets of operating instructions for all equipment installed under this contract, including shop drawings, piping diagrams, wiring diagrams, maintenance recommendations and information concerning replacement parts.

1.05 GUARANTEE

A. The Contractor shall guarantee all work to be in accordance with contract requirements and free from defective or inferior materials, equipment, and workmanship for a period of one year, and Contractor shall guarantee that all equipment is of proper size and design and so installed as to produce the capacities and results specified and shown on the drawings.

1.06 DATA AND DRAWINGS

A. Electrical drawings are generally diagrammatic, and where not dimensioned or detailed, indicate approximate locations and general arrangements of electrical work. All electrical work offsets, rises, and fittings are not necessarily shown; however, provide these as required by the conditions involved.

B. Structure dimensions: TAKE THESE FROM CERTIFIED AND SHOP DRAWINGS: AND FROM ACTUAL MEASUREMENTS MADE BY ELECTRICAL SECTION OF EACH STRUCTURE INVOLVED.

C. Equipment NOT furnished by Electrical Section but requiring electrical connections: from other Sections and others furnishing this equipment, determine exact electrical connection requirements therefore; locations and arrangements of electrical connections indicated for this equipment are APPROXIMATE ONLY.

PART 2 MATERIALS AND PRODUCTS

2.01 MATERIALS

A. Equipment and materials used in the work shall be in accordance with the contract documents; of the best quality and grade for the use intended; shall be new and unused; and shall be the manufacturer's latest standard or current model for which replacement parts are readily available.

B. All electrical equipment shall conform to applicable NEMA Standards whether specified hereinafter or not, and to other applicable Standards which may be specified hereinafter.

2.02 CONDUIT AND FITTINGS, EXCEPT UNDERGROUND DUCTS

A. Conduits: These shall be zinc coated rigid steel, zinc coated steel electric metallic tubing (hereinafter referred to as "thin wall conduit"), ANSI Specification C80.5 rigid aluminum, Carlon Type 80 or as approved UL listed heavy wall rigid PVC, as applicable. In each case where the conduit type is indicated, specified, or required by the Codes, install only the indicated, specified, or Code required; OTHERWISE, conduit usage shall be as follows:

1. Embedded in concrete: rigid steel, thin wall, or PVC conduit.
2. In contact with ground: rigid steel or PVC conduit.
3. For supporting fixture, outlet boxes, and other devices and equipment which are not directly anchored to the building structure: rigid steel or rigid aluminum conduit, with all joints and connections threaded.
4. Flexible connections: flexible steel conduit (Greenfield), in short lengths only, at each motor connection and other locations requiring flexibility; of liquid-tight type where exposed to weather or excessive moisture.
5. All other locations: thin wall, rigid steel, rigid aluminum, or PVC conduit, as applicable.
6. DO NOT INSTALL ALUMINUM CONDUIT UNDERGROUND, IN CONTACT WITH GROUND, OR EMBEDDED IN CONCRETE.

B. Conduit Fittings: For Metallic conduit, fittings shall be zinc coated steel, cast aluminum, or cast zinc. For PVC conduit, fittings shall be of the same material and make as those of the conduit. All fittings exposed to weather shall be weatherproof type.

2.03 PULL BOXES, JUNCTION BOXES, WIRING GUTTERS, AND FREE STANDING ENCLOSURES

A. General: Pull boxes, junction boxes, and wiring gutters shall be of the types and minimum sizes indicated or as required for the conditions involved where types and sizes are not indicated. Before installation, check proposed locations of boxes and gutters with the architectural, structural, and mechanical drawings, and locate each box and gutter so that it shall be accessible in the finished project.

B. Underground Boxes: These shall be Hope HD6000 galvanized cast iron strictly watertight submersible type, with wide flanges on box top, neoprene cover gasket, cover bolted on with stainless steel bolts, and threaded hubs for all conduit connections.

C. Above-Ground Boxes and Gutters: These shall be galvanized steel of at least Code gage for each size involved, and of weatherproof construction where exposed to weather.

D. Enclosures shall be of size and type shown on Plans.

2.04 OUTLET BOXES

A. General: Outlet boxes and covers shall be steel or cast ferrous metal with zinc or other suitable metallic rustproof coating, or cast aluminum, all of the proper sizes and types to accommodate the conduits, conductors, connections, devices, fixtures, architectural conditions, and structural conditions involved.

B. Special Box Requirements:

1. Exposed-to-weather outlet boxes shall be cast metal, with threaded hubs and gasketed covers, all strictly weatherproof.
2. Floor boxes for floor outlet devices shall be Steel City Series 88, with floor adjusting rings and appropriate type floor plates for attaching the outlet devices thereto.

2.05 WIRES, JOINTS, AND SPLICES, 600 VOLTS AND LESS

A. Lighting and power wire shall be copper only; types shall be as follows:

1. Where type is indicated: indicated type only.
2. High temperature and other special conditions: types NEC approved for the conditions involved.
3. Special system wire: as recommended by the manufacturer of the equipment involved.

B. Identification:

1. General: All wires shall be identified as required by NEC.
2. Control and special systems wire: These shall be color coded throughout, or identified at each terminal and junction point with a suitable permanently attached tag or label.

C. Joints and Splices: Make these with suitable solderless connectors, in the various boxes, gutters, and similar locations, but not in any conduit. Leave enough wire slack to permit at least one splice or joint to be remade in case of fault.

1. Branch circuit, control, and special system wire joints: Use Ideal, Buchanan, 3M, or similar tool-applied or twist-on type connectors.
2. All other wire joints: Use Ilsco tin plated aluminum type pressure connectors, or suitable brass, bronze, or copper pressure type connectors.
3. Insulate all joints and splices with suitable insulating sleeves or caps integral with connectors or separate therefrom, or with vinyl plastic insulating tape.

2.06 TRANSFORMERS: (600 VOLTS AND LESS)

A. Transformers shall be Westinghouse, General Electric, Hevi-Duty, Sorgel, or as approved enclosed dry type, each with at least 2-1/2% FCAN taps, NEMA standard sound level, and 150 C. maximum temperature rise.

2.07 PANELBOARDS

A. General: Panelboards shall be Westinghouse, Square D, ITE, General Electric, or as approved, circuit breaker or fusible switch type as specified below. Capacities, quantities of overcurrent protective devices, mounting type (surface or flush), and

special requirements (if any) for each panelboard shall be as indicated on drawings. Each panelboard shall have a lockable door with a circuit director card and card holder. All panelboards shall be keyed alike; furnish one key for each lock; deliver these to the Owner's authorized representative, and obtain representative's signed receipt therefore. Where two or more flush panelboards are mounted side-by-side, boxes and trims of all panelboards in each individual groups shall be the same size and type.

1. Unless otherwise indicated and otherwise specified, load centers shall not be permitted.

B. Types of Panelboards: Each panelboard shall be of type required to accommodate application involved, and indicated or available fault current at panelboard. Overcurrent protective device type shall be:

1. Branch circuit panelboards: Molded case circuit breakers. Where indicated or required, circuit breakers shall have ground fault tripping devices.
2. Distribution panelboards: Molded case circuit breakers.

C. Circuiting: Circuit numbers shown on drawings indicate specific panelboard to which each branch circuit shall be connected, and specific outlets which shall be connected to each branch circuit, and unless otherwise indicated, these circuit numbers do not necessarily indicate actual number to same numbered branch circuit, and connect each branch circuit to indicated panelboard. In each individual panelboard:

1. Balance active circuits on panelboard busses, and leave spare circuit breakers equally divided among panelboard busses, as nearly as practicable.
2. Connect each underground wire of each 3 and 4 wire common neutral circuit to a different panelboard bus.
3. Group conveniently at the top of panelboard all breakers used for switching lights not having wall or other switches, and neatly painted handles of such breakers with white durable quick-drying automobile touch-up or other similar type lacquer for each identification as light switches. This does not apply to any panelboard in which ALL circuit breakers serve as lighting switches.

2.08 DISCONNECT SWITCHES, MOTOR STARTERS, AND SEPARATE CIRCUIT BREAKERS

A. General: Except as otherwise specified below, Electrical Section shall provide disconnect switches, circuit breakers, and motor starters for all motors and other electrically operated equipment regardless of who furnishes and/or installs that equipment. Types and locations are not indicated.

1. These devices which are located on other equipment shall be as specified

under the corresponding headings; these devices NOT located on other equipment shall be as specified below, and shall be separately mounted.

2. Separately mounted disconnect switches, circuit breakers, and motor starters shall be Westinghouse, General Electric, Square D, Allen-Bradley, ITE or equal. Enclosure types shall be: NEMA 3R for devices exposed to weather; NEC required type for devices in other special locations; and NEMA 1 type for devices in other locations. Each circuit breaker and each disconnect switch, including those integral with motor starters, shall have padlocking means.

B. Disconnect Switches: These shall be: non-fused safety switches where overcurrent protection is required; and fused safety switches or circuit breakers (as indicated) where overcurrent protection is required; except that other suitable properly rated switches may be used for fractional hp motors and other small loads.

C. Circuit Breakers: These shall be molded case type.

D. Manual Motor Starters: These shall have neon motor-running pilot lights and proper size overload protective devices for the motors involved; and shall be surface mounted in equipment rooms and unfinished areas, and flush mounted in finished areas. Where manual motor starters are not indicated, small manually controlled motors shall be controlled directly by the panelboard circuit breakers.

E. Magnetic Motor Starters: Each of these shall have built-in devices as indicated, and shall have in each pole a separate overload protective device of proper rating for the motor controlled by the starter. Except as otherwise specified below, each magnetic starter shall have a built-in control circuit transformer to supply 120 volts to the control circuit. All control circuits extending outside of starter enclosures shall operate on overcurrent-protected 120 volts.

1. Built-in control circuit transformers shall be omitted: where 120 volts is available directly from motor feeder within starter enclosure; where one or more 120 volt control circuits from sources outside of starter enclosures are indicated; and where ALL control devices and control circuitry are contained entirely within the starter enclosure, in which case the holding coil and control devices may operate directly on the motor feeder voltage.

2.09 MOTOR CONTROL CENTERS - WHERE SHOWN

A. Motor control centers shall be Westinghouse, Square D, ITE, General Electric, or equal standing metal enclosed assemblies, NEMA type B Class I construction with 20" X 90" sections, complete with copper or aluminum busses, bused disconnect switches, motor starters, pilot lights, selector switches, and other devices, of the types, sizes, quantities, electrical characteristics, capacities, and suggested arrangements as indicated. Each entire motor control center shall be completely assembled, bussed, wired, and finish painted at the factory into sections to facilitate

shipment to the job site, ready for field assembly and installation.

B. Disconnect Switches, Selector Switches, Pilot Lights, and Other Devices: Each magnetic starter shall be provided with a fused disconnect switch, and a selector switch, as indicated. Each selector switch shall be provided with a red pilot light to indicate motor running and a green pilot light to indicate motor not running. All pilot lights shall be transformer type, with 6 - 8 volt lamps in place. Each disconnect switch shall have padlocking means.

C. Overload Protective Devices: Each fuse and each magnetic starter and fuse overload protective device shall be of the proper size to serve the motor or other item controlled thereby. Each 3 phase starter shall have 3 overload protective devices (one in each phase).

D. Holding Coils and Control Circuits: These shall operate on 120 volts.

E. Control Circuit Transformers: Except where 120 volts are directly available from the motor control center supply feeder, each individual motor starter shall have a separate built-in control transformer to supply the required 120 volts for the control circuit. Control circuits shall have overcurrent protection as required by NEC.

F. Identification: Identify each selector switch and each pilot light with the proper legend plate. Identify each other device and control with a laminated plastic nameplate engraved with the designation of the equipment controlled thereby, and securely attached to the device door.

G. Shop Drawings: Before fabrication, submit shop drawings of proposed motor control centers, and a complete schedule of proposed identification data.

2.10 WIRING DEVICES

A. General:

1. Wiring devices shall be Bryant, Hubbell, Arrow-Hart, Leviton, Sierra, Slater, General Electric, or other makes as approved or as specified below. Types of wiring devices required for this project shall be indicated on the drawings, or suitable for the application involved if type is not indicated; qualities, ratings, and other requirements of wiring devices shall be as specified below. All wiring device types specified below may not necessarily be required for this project; disregard specifications for devices which are neither indicated nor required for this project.
2. Receptacle configurations shall conform to NEMA standards.
3. Exposed finishes shall be: for each device with a plastic plate, same color as plate; for devices with stainless steel plates, ivory or brown; and for all other devices, brown or black.

B. Devices: Qualities, ratings and other requirements shall be:

1. Wall switches: 20A 120-277VAV, single or double pole, 3 or 4-way as applicable; Bryant 4900 series; Hubbell 1220 series; A-H 1991 series. Where indicated as WEATHERPROOF, the above-specified switch is FS condulet, with Bryant 7420, Hubbell 7420, or A-H 7420 spring door cover.
2. Wall switches with pilot lights: 15A 120-277VAC switch with neon pilot light; Bryant 4641 and 1375; A-H QST1 and T1720.
3. Duplex receptacles: 20A 125V 2 pole 3 wire grounding; Bryant 5352; Hubbell 5362; A-H 5735-S. Where indicated WEATHERPROOF, the above-specified duplex receptacle in FS Condulet, with Bryant 868, Hubbell 5206, or A-H 4500 double lift spring door cover.
4. Ground fault circuit interrupter receptacles: 20A 125V feed-thru duplex 5ma sensitivity type with test and reset buttons; A-H 1595-F; Leviton 6398.
5. Single receptacles: 20A 125V 2 pole 3 wire grounding; Bryant 5361; Hubbell 5361; A-H 5861.
6. Single receptacles: 20A 250V 2 pole 3 wire grounding; Bryant 5461; Hubbell 5461; A-H 9861.
7. Heavy duty receptacles: 250V 2 pole 3 wire grounding, 30A or 50A as required; Bryant 9630FR and 9650FR; Hubbell 9330 and 9367; A-H 5700 and 5709.
8. Flush floor receptacles: 20A 125V 2 pole 3 wire grounding: above specified single receptacle with Steel City 889 and P90-2 receptacle and floor plates.
9. Standing floor receptacles: 20A 125V 2 pole 3 wire grounding; above specified duplex receptacle in Steel City SFH50 outlet fitting.
10. Clock Outlets: 15A 125V 2 pole 3 wire grounding; Bryant 2828-GS; Hubbell 7707-55; A-H 5/08; with stainless steel plate.
11. Other devices not specified above: as indicated on the drawings.

C. Device Plates: Unless otherwise specified or inapplicable to the devices involved, plates shall be: emergency circuit devices, red plastic; toilet and lavatory rooms, satin finish stainless steel; other finished areas, ivory plastic; and unfurnished areas, brown plastic for flush devices, and zinc coated steel for surface devices.

PART 3 COORDINATION

3.01 The Electric Utility Company shall:

A. Furnish and install pole mounted and/or pad mounted service transformers as required.

B. Provide metering equipment to electrical contractor for mounting on customers service pole, or building wall, and/or pedestal enclosure for electrical underground service.

C. Provide high voltage (primary) service, from (primary) side of service transformers

to utility electric distribution system.

D. Connecting the customers electrical service conductors to load side (secondary) of service transformer and/or utility distribution service lines.

E. Furnish and install concrete pad for single phase pad mounted transformers.

3.02 Contractor shall:

A. Provide customers electrical service equipment to weatherhead(s) on customers service poles and/or to secondary side of pad mounted transformer enclosure as directed by utility company.

B. Leave free line ends on customers electrical service conductors as directed by Electric Utility Company.

C. Make arrangements with Electric Utility Company for their service and metering work, PAY ALL CHARGES THEREFOR, AND INCLUDE COST THEREOF IN CONTRACT PRICE.

D. Furnish and install pedestal mounted meter centers for underground electrical service as directed by utility company for underground service to sites not enclosed by buildings or where customer service poles cannot be furnished and installed at the site.

E. Furnish and install concrete pad for three phase pad mounted transformers.

F. Furnish and install a "CT" cabinet when three-phase power service is specified. Cabinet shall be weather proof and approved by the local power company before installing.

PART 4 EXECUTION

4.01 INSTALLATION

A. Work shall be installed under the constant supervision of a competent superintendent and by skilled licensed electricians.

B. All apparatus and equipment shall be installed and connected in accordance with the best engineering practices and in accordance with the manufacturer's recommendations. All auxiliary wiring, relays, contractors, controllers, and electrical connections of any description recommended by the manufacturer and required for the proper operation of all items of equipment furnished and installed complete are to be part of this section.

C. Install all equipment in accordance with applicable manufacturer's drawings and

recommendations.

D. Contractor agrees to assume responsibility for liability, workmanship, and quality of materials concerning work sublet to others. Before contract is sublet, submit in writing the names of proposed subcontractor and obtain written approval thereof.

4.02 CONDUIT

A. Run exposed conduit, trays, and other wireways parallel to the principal parts of the building. Wireways shall be run concealed when provisions are made in floors, walls, ceilings, and chases through all finished areas.

B. Conduits and other raceways shall be kept as close as possible to ceilings, walls, columns, etc., and shall be installed in such an orderly manner as to take up a minimum of space and allow a maximum of head room.

C. Provide templates, layout drawings, and supervision to ensure correct placement of anchors in concrete.

D. Excavate and backfill as required for the electrical work. Cut bottoms and trenches to the proper lines and grades to provide firm and continuous support for the underground electrical work, and to provide 24" MINIMUM depth from finished grade to tops of all exterior underground electrical work. Sheet and brace excavations as required to protect personnel and adjacent structures.

E. After the underground electrical work has been installed and approved, place all backfill in 8" maximum thickness loose layers, and compact each layer to at least the density of the adjacent undisturbed site soil, using pneumatic or other suitable power tampers. Mass backfilling (backfilling without tamping) is prohibited.

F. Warning tape for buried electrical work: install detectable warning tape directly over every device by burying tape as close to the surface as possible but no less than 6 inches beneath finished grade. Tape shall be Reef Industries, Inc., "Terra Tape D", or as approved, composition metallized foil-plastic film laminate bearing imprint describing the type of buried electrical work. All materials shall be specifically formulated for prolonged use underground.

G. General: Ream ends of all conduits after cutting. Prior to wire pulling, keep all open conduit ends plugged, and swab out all trapped conduits in which water or moisture has collected. Where conduits are concealed in walls, install these conduits so that the exposed wall faces are not marred.

H. PVC Conduits: Solvent weld all joints between PVC materials, with cement furnished by the conduit manufacturer. Provide suitable adapters where PVC conduits are coupled to metallic conduits. Provide a rigid steel elbow at the base of each exposed riser from below-ground and below-floor to above-ground and above-

floor.

I. Conduit routing, general: Wiring herein for locations where concealed and exposed conduits are required and/or permitted. Where conduit routings are detailed or dimensioned, install conduits accordingly; OTHERWISE, install concealed conduits with the shortest practicable path, and install all exposed conduits in straight, level, and plumb lines, parallel with or at right angles with beams, walls, ceilings, and other building lines.

J. Riser elbows: Provide a galvanized rigid steel conduit elbow as the base of each duct riser from below-ground and below-floor to above-ground and above-floor, coupled to the horizontal end of PVC conduit with a suitable adapter.

K. Supports and spacers: Provide these as required to securely hold conduits in proper position to and during concrete placing, with required spacing between adjacent conduits.

L. Concrete Encasement: This shall be as detailed; if not detailed, concrete shall be at least 3 inches thick below, above, and on each side of the duct assembly. (Concrete Section, with 5/8" maximum size aggregate.)

M. Grounding Conductor: For each run of one or more PVC conduits in an underground duct assembly, provide a single stranded copper grounding conductor, buried directly in the ground below the concrete encasement, and connected to the above-ground metallic conduit system at each end of the duct run.

4.03 OUTLET BOXES

A. Before installation, check proposed location of each outlet box with the architectural, structural, and civil drawings, locate each outlet box so that it is accessible and interference-free in the finished project.

B. Set each concealed box flush with finished surfaces, and so that exposed finished surfaces are not marred.

C. Install each wall switch on the knob side of the door involved. Before placing each wall switch box, verify the applicable door swing with the architectural drawings, and locate the wall switch box accordingly.

D. Where equipment is served by exposed flexible cords, locate the outlet box as near as practicable to the equipment connection point, to minimize flexible cord length.

4.04 HANGERS, SUPPORTS AND SLEEVES

A. Securely attach all hangers, supports, and devices to the building structure with anchors suitable for the types of building construction involved. Provide all

necessary pipe, angle iron, "Unistrut", "Kindorf", or other suitable steel auxiliary supports for the electrical work.

B. Hangers and supports for conduits and raceways shall be standard conduit or raceway straps, or other suitable clamping devices. Trapeze hangers may be used for groups of suspended horizontal conduits, with each conduit clamped to each trapeze bar. Perforated strap iron hangers shall not be permitted.

C. Maximum hanger or support spacings for all conduits shall be as required by the Codes. Support non-concrete encased underground conduits by laying with full length bearing on firm trench bottoms. Support each riser conduit at each building floor level.

D. Adequately support all boxes, gutters, panelboards, switches, starters, fixtures, and other devices and equipment. Where supporting method is indicated or detailed, provide supports accordingly; OTHERWISE, supports shall be as required by the Codes, and as approved.

E. Provide all necessary sleeves for conduits and other electrical items through concrete masonry construction where electrical items are not installed prior to concrete placing and masonry laying. Sleeves through concrete walls, concrete columns, and concrete beams shall be IPS steel pipe or rigid steel conduit, flush with finished concrete surfaces. Sleeves for all exposed conduits passing through floors (except slabs on ground) where water on floor can pass through the opening shall be galvanized IPS pipe or galvanized rigid steel conduit extending 2 inches above finished floor, and flush with slab below. Other sleeves may be sheet metal or plastic.

4.05 GROUNDING

A. Ground electrical equipment and conductors as required by NEC and other applicable electrical codes.

1. Panelboards served by individual transformers: ground panelboard neutral busses to earth grounding system.

4.06 FUSES

A. Provide fuses of types and sizes, in place, for each device requiring fuses. Unless otherwise indicated, fuses shall be nonrenewable lag type. Fuses shall be Bussman, General Electric, or equal.

1. Spare fuses: Furnish 3 spare fuses of each size and type required for the electrical system, deliver these to the Owner's authorized representative in a suitable clearly labeled box, and obtain representative's signed receipt therefore.

4.07 TYPE OF SYSTEM. WIRING METHOD

A. Electrical system characteristics: These shall be as indicated. In addition, whether indicated or not, provide low voltage (less than 120 volts) wiring for controls and other purposes, as required for the complete electrical system.

B. Enclosures: Regardless of voltage or use, install wiring in conduits and metal or other enclosures, unless otherwise indicated or otherwise specified.

C. Finished areas: Conceal conduits below floors, within slab, within walls, within pipe chases, above suspended ceiling, and within other building construction, in offices, rest rooms, and other finished areas, unless otherwise indicated.

D. Unfinished areas: Install above-floor conduits exposed in areas where pipe chases or suspended ceilings are not indicated or concealing is otherwise impracticable, in mechanical and electrical equipment rooms, manufacturing areas, warehouse or storage areas, and other unfinished areas.

E. SPECIAL NOTE, MAINTENANCE LIFT AREAS: Whether indicated or not, arrange electrical work to avoid interference with traveling cars and rail, their accessories; provide rises, offsets, and fittings as required to accomplish this.

F. Flexible Cords: Exposed flexible cords approved for the purposes involved shall be used to connect equipment where indicated or specified, and where equipment is factory furnished with or factory arranged for flexible cord connections only. However, in each such case, install the supply outlet as near as practicable to the equipment served thereby, and use the shortest practicable length of exposed flexible cord between the equipment and the outlet. If a receptacle is used as an outlet, the receptacle and the cord plug shall be 3 or 4 wire (as applicable) grounding twist-lock type.

4.08 EQUIPMENT LISTS, SHOP DRAWINGS AND SAMPLES

A. Submit to the City Engineer or his agent for approval, within 60 days after receipt of NOTICE-TO-PROCEED with the work a complete list of materials, equipment and accessories proposed for use, including complete descriptions and specifications of any proposed substitutions, manufacturer's shop drawings, and roughing-in work. Submit 5 copies of all items for approval and furnish additional copies if required for installation purposes.

B. Submission material and all shop drawings for the various items of equipment shall be marked with the respective mark number or identification of the equipment show on the drawings or specified. The shop drawings shall list all ratings, capacities, accessories, and other pertinent data to show that the proposed item is as called for and as specified.

C. Shop drawings shall show all sizes and details or required concrete and steel machine foundation, locations of anchor bolts, physical dimensions of equipment, capacity characteristics of equipment, and all other work pertinent to details. Steel racks or stands for mechanical apparatus shall be furnished and installed as part of the mechanical work.

PART 5 TESTING

5.01 TEST, INSPECTIONS, ADJUSTMENTS AND CLEAN-UP

A. High voltage cables (over 600 volts): Before energizing, perform a direct current high potential test on each cable in each circuit operating at more than 600 volts, at a test voltage and in accordance with recommendations of the cable manufacturer for the type and voltage rating of the cables involved, and generally as specified below. Maintain test voltage on each cable for 15 minutes. Continuously record cable leakage current at not more than one minute intervals, as measured by a DC milliammeter connected in a series with the high voltage test transformer ground. Increase test voltage at a slow uniform rate from zero to required test voltage with a suitable variable voltage regulator. Begin testing time when cable test voltage has reached that which is recommended by the cable manufacturer. Submit the satisfactorily passed high potential tests.

B. Other wiring, 600 volts and less: Make installation tests with a "Megger", demonstrate that neither short circuits not ground faults exist, and that wiring complies with NEC.

C. Furnish suitable testing equipment, give the City Engineer or his agent and all applicable authorities ample advance notice of all proposed tests and readiness of work for inspections, and conduct each test in their presence, as approved. Do not conceal electrical work until all necessary inspections have been made and all required tests have been approved by the City Engineer or his agent and all applicable authorities.

D. Put entire electrical system in operation, test all equipment, remedy all defects, and make all necessary adjustments. Demonstrate that the entire system functions satisfactorily, as specified, as indicated, and as approved.

E. After electrical system has been tested and before any field painting is commenced, clean up all electrical work thoroughly. Remove all foreign matter which has accumulated in all fixtures, equipment, and enclosures. Clean all fixtures, glassware, and reflectors, and clean and polish all other surfaces which are not to be painted so that they present a new and acceptable appearance.

5.02 FEEDER, STARTER, SWITCH, PROTECTIVE DEVICE, AND OTHER ELECTRICAL DEVICE SIZES

A. Capacities of feeders, motor starters, circuit breakers, switches, protective devices, and other electrical devices indicated to be furnished and installed by Electrical Section for electrically operated equipment, regardless of who furnishes and/or installs that equipment, are based upon the average horsepower and/or electrical ratings of the bypes and sizes of electrically operated equipment upon which designs of the mechanical, electrical, and other systems are based. HORSEPOWER AND/OR ELECTRICAL RATINGS OF ELECTRICALLY OPERATED EQUIPMENT INDICATED ON ELECTRICAL DRAWINGS SHALL NOT LIMIT SIZES OF THE ELECTRICALLY OPERATED EQUIPMENT AND CAPACITY OF THE ELECTRICAL WORK THEREFOR.

1. Before commencing electrical work for electrically operated equipment, Electrical Section shall: check horsepower and/or electrical rating of each individual electrically operated equipment items, regardless of who furnishes and/or installs that equipment; and adjust sizes of all applicable feeders, motor starters, circuit breakers, switches, protective devices, and other electrical devices furnished by Electrical Section, as required to provide proper protection and satisfactory operation of the electrically operated equipment actually installed. This includes increasing to next larger size, or decreasing to next smaller size, all feeders, circuit breakers, starters, switches, protective devices, and other electrical devices involved, as required to match capacities of corresponding electrically operated equipment actually installed, except that no sizes shall be decreased without approval.

B. Switches, circuit breakers, motor starters, protective devices, and other electrical devices furnished by other Sections and by others for installation and/or wiring by Electrical Section, are specified elsewhere to have adequate capacities to serve the electrically operated equipment for which they are furnished. However, before installing and/or wiring each of these devices, Electrical Section shall check each individual device's electrical rating with the horsepower and/or electrical rating of the corresponding electrically operated equipment actually installed, regardless of who furnishes and/or installs the devices and equipment. Electrical Section shall not install and/or wire any device which is found to be the incorrect size, and shall see to it that correctly sized devices are furnished by the applicable Section and other applicable persons in all cases.

C. The intent and requirement of the above is to obtain a coordinated electrical system and above all shall be done by Electrical Section as part of the contract.

PART 6 IDENTIFICATION

6.01 CIRCUITS & EQUIPMENT

Identification designation all correspond to those indicated on the electrical drawings.

A. Panelboards:

1. Clearly typewrite on each panelboard directory card the designations of the fixtures, outlets, and equipment served by each device in the panelboard.
2. Identify each entire panelboard assembly with a 1" minimum height laminated plastic nameplate engraved with 1/2" minimum height characters showing panelboard designation, and securely attach to the inside of panelboard door over directory card.

B. Separately enclosed devices: Identify each separately enclosed circuit breaker, disconnect switch, magnetic motor starter, and manual motor starter, by attaching to the device cover a metal or plastic nameplate clearly and permanently lettered with the description and location of the equipment controlled by the device.

C. Switchboard and motor control center equipment: Identify devices on this equipment as specified in the corresponding Articles describing the equipment.

PART 7 MEASUREMENT AND PAYMENT - ELECTRICAL WORK

A. When provided for on the Bid Form, payment for Electrical Work as above specified shall be paid for at the Contract lump sum price. When not provided for on the Bid Form, payment for Electrical Work shall not be made directly, but shall be included in the payment for the items with which it is associated.

END OF SECTION

SECTION 26 05 10

ELECTRICAL - BASIC MATERIALS & METHODS

PART 1 GENERAL

1.01 BASIC REQUIREMENTS

A. Equipment and materials used in the work shall be in accordance with the contract documents; of the best quality and grade for the use intended; shall be new and unused; and shall be the manufacturer's latest standard or current model for which replacement parts are readily available.

B. Work shall be installed under the constant supervision of a competent superintendent and by skilled competent electricians.

C. All apparatus and equipment shall be installed and connected in accordance with the best engineering practices and in accordance with the manufacturer's recommendations. All auxiliary wiring, relays, contractors, controllers, and electrical connections of any description recommended by the manufacturer and required for the proper operation of all items of equipment furnished and installed complete.

1.02 ELECTRICAL WIRING FOR EQUIPMENT OF OTHER SECTIONS

A. General

1. All electrical wiring of every description required to operate all equipment furnished by other Sections shall be done by the Electrical Section, except as otherwise specified hereinafter. Read carefully all other Sections in which electrically operated equipment is specified, and include in the electrical work all electric wiring required for the proper operation of the equipment, whether indicated on the electrical drawings or not. Coordinate the Electrical section work with that of all other Sections that furnish equipment requiring electrical connections.
2. All control devices required to operate the equipment shall be furnished by the Section that furnishes the equipment, unless otherwise specified. All control devices which are not factory mounted on the equipment and require electrical connections ONLY shall be installed by the Electrical Section. All control devices which are not factory mounted on the equipment and require piping, linkage, remote bulb, or other mechanical connections as well as electrical connections shall be installed by the Section that furnishes the equipment involved, ready for electrical connections.
3. Outlet locations indicated on the electrical drawings for motors, controls, and other electrically operated items of other Sections are APPROXIMATE

ONLY, as the actual wiring requirements are not necessarily identical for the various makes of each item of equipment involved. However, the Electrical Section shall locate all outlets and arrange all wiring to properly serve the equipment ACTUALLY INSTALLED, generally as indicated on the electrical drawings, but EXACTLY in accordance with rough-in sheets and/or wiring diagrams furnished by the other Sections involved.

4. The necessary wiring diagrams shall be furnished by the Section that furnished the equipment involved, and after these are approved, do all wiring accordingly.

B. Wiring NOT Included: Wiring which is factory installed on equipment.

C. Wiring Included: Generally, equipment of other Sections requiring wiring includes but shall not be limited to the following items:

1. Package Pumping Stations
2. Pumps
3. Level Controls and Pump Control Panel

1.03 HANGERS, SUPPORTS AND SLEEVES

A. Securely attach all hangers, supports, and devices to the building structure with anchors suitable for the types of building construction involved. Provide all necessary pipe, angle iron, "Unistrut", "Kindorf", or other suitable steel auxiliary supports for the electrical work.

B. Hangers or supports for conduits and raceways shall be standard conduit or raceway straps, or other suitable clamping devices. Trapeze hangers may be used for groups of suspended horizontal conduits, with each conduit clamped to each trapeze bar. Perforated strap iron hangers shall not be permitted.

C. Maximum hanger or support spacing for all conduits shall be as required by the Codes. Support non-concrete encased underground conduits by laying with full length bearing on firm trench bottoms. Support each riser conduit at each building floor level.

D. Adequately support all boxes, gutters, panel boards, switches, starters, fixtures, and other devices and equipment. Where supporting method is indicated or detailed, provide supports accordingly; OTHERWISE, supports shall be as required by the Codes, and as approved.

E. Provide all necessary sleeves for conduits and other electrical items passing through concrete masonry construction where electrical items are not installed prior to concrete placing and masonry laying. Sleeves through concrete walls, concrete columns, and concrete beams shall be IPS steel pipe or rigid steel conduit, flush with finished concrete surfaces. Sleeves for all exposed conduits passing through floors

(except slabs on ground) where water on floor can pass through the opening shall be galvanized IPS pipe or galvanized rigid steel conduit extending 2 inches above finished floor, and flush with slab below. Other sleeves may be sheet metal or plastic.

PART 2 PRODUCTS

2.01 CONDUIT AND FITTINGS, EXCEPT UNDERGROUND DUCTS

A. Conduits: These shall be zinc coated rigid steel, zinc coated steel electric metallic tubing (hereinafter referred to as "thin wall conduit"), ANSI Specification C80.5 rigid aluminum, Carlon Type 80 or as approved UL listed heavy wall rigid PVC, as applicable. In each case where the conduit type is indicated, specified, or required by the Codes, install only the indicated, specified, or Code required; OTHERWISE, conduit usage shall be as follows:

1. Embedded in concrete: rigid steel, thin wall, or PVC conduit.
2. In contact with ground: rigid steel or PVC conduit.
3. For supporting fixture, outlet boxes, and other devices and equipment which are not directly anchored to the building structure: rigid steel or rigid aluminum conduit, with all joints and connections threaded.
4. Flexible connections: flexible steel conduit (Greenfield"), in short lengths only, at each motor connection and other location requiring flexibility; of liquid-tight type where exposed to weather or excessive moisture.
5. All other locations: thin wall, rigid steel, rigid aluminum, or PVC conduit, as applicable.
6. DO NOT INSTALL ALUMINUM CONDUIT UNDERGROUND, IN CONTACT WITH GROUND, OR EMBEDDED IN CONCRETE.

B. Conduit Fittings: For metallic conduit, fittings shall be zinc coated steel, cast aluminum, or cast zinc . For PVC conduit, fittings shall be of the same material and make as those of the conduit. All fittings exposed to weather shall be weatherproof type.

C. Installation:

1. General: Ream ends of all conduits after cutting. Prior to wire pulling, keep all open conduit ends plugged, and swab out all trapped conduits in which water or moisture has collected. Where conduits are concealed in walls, install these conduits so that the exposed wall faces shall not be marred.
2. PVC conduits: Solvent weld all joints between PVC materials, with cement furnished by the conduit manufacturer. Provide suitable adapters where PVC conduits are coupled to metallic conduits. Provide a rigid steel elbow at the base of each exposed riser from below-ground and below-floor to above-ground and above-floor.
3. Conduit routing, general: See TYPE OF SYSTEM, METHOD OF WIRING

herein for locations where concealed and exposed conduits are required and/or permitted. Where conduit routings are detailed or dimensioned, install conduits accordingly; OTHERWISE, install concealed conduits with the shortest practicable path, and install all exposed conduits in straight, level, and plumb lines, parallel with or at right angles with beams, walls, ceilings, and other building lines.

4. Riser elbows: Provide a galvanized rigid steel conduit elbow at the base of each duct riser from below ground and below-floor to above-ground and above-floor, coupled to the horizontal end of PVC conduit with a suitable adapter.
5. Supports and spacers: Provide these as required to securely hold conduits in proper position to and during concrete placing, with required spacing between adjacent conduits.

D. Concrete Encasement: This shall be as detailed; if not detailed, concrete shall be at least 3 inches thick below, above, and on each side of the duct assembly. (Concrete Section, with 5/8" maximum size aggregate).

E. Grounding Conductor: For each run of one or more PVC conduits in an underground duct assembly, provide a single stranded copper grounding conductor, buried directly in the ground below the concrete encasement, and connected to the above-ground metallic conduit system at each end of the duct run.

2.02 PULL BOXES, JUNCTION BOXES, WIRING GUTTERS, AND FREE STANDING ENCLOSURES

A. General: Pull boxes, junction boxes, and wiring gutters shall be of the types and minimum sizes indicated, or as required for the conditions involved where types and sizes are not indicated. Before installation, check proposed locations of boxes and gutters with the architectural, structural, and mechanical drawings, and locate each box and gutter so that it shall be accessible in the finished project.

B. Underground Boxes: These shall be Hope HD6000 galvanized cast iron strictly watertight submersible type, with wide flanges on box top, neoprene cover gasket, cover bolted on with stainless steel bolts, and threaded hubs for all conduit connections.

C. Above-Ground Boxes and Gutters: These shall be galvanized steel of at least Code gage for each size involved, and of weatherproof construction where exposed to weather.

D. Enclosures shall be of size and type shown on Plans.

1. Where indicated, boxes for underground conduits shall be above ground and encased in concrete pedestals, as detailed.

2.03 OUTLET BOXES

A. General: Outlet boxes and covers therefore shall be steel or cast ferrous metal with zinc or other suitable metallic rustproof coating, or cast aluminum, all of the proper sizes and types to accommodate the conduits, conductors, connections, devices, fixtures, architectural conditions, and structural conditions involved.

B. Special Box Requirements:

1. Exposed-to-weather outlet boxes shall be cast metal, with threaded hubs and gasketed covers, all strictly weatherproof.
2. Floor boxes for floor outlet devices shall be Steel City Series 88, with floor adjusting rings and appropriate type floor plates for attaching the outlet devices thereto.

C. Installations:

1. Before installation, check proposed location of each outlet box with the architectural, structural, and civil drawings, and locate each outlet box so that it is accessible and interference-free in the finished project.
2. Set each concealed box flush with finished surfaces, and so that exposed finished surfaces are not marred.
3. Install each wall switch on the knob side of the door involved. Before placing each wall switch box, verify the applicable door swing with the architectural drawings, and locate the wall switch box accordingly.
4. Where equipment is served by exposed flexible cords, locate the outlet box as near as practicable to the equipment connection point, to minimize flexible cord length.

2.04 WIRE, JOINTS, AND SPLICES, 600 VOLTS AND LESS

A. Lighting and power wire shall be copper only; types shall be as follows:

1. Where type is indicated: indicated type only.
2. High temperature and other special conditions: types NEC approved for the conditions involved.
3. Special system wire: as recommended by the manufacturer of the equipment involved.

B. Identification:

1. General: All wires shall be identified as required by NEC
2. Control and special systems wire: These shall be color coded throughout, or identified at each terminal and junction point with a suitable permanently attached tag or label.

C. Joints and Splices: Make these with suitable solderless connectors, in the various boxes, gutters, and similar locations, but not in any conduit. Leave enough wire slack to permit at least one splice or joint to be remade in case of fault.

1. Branch circuit, control, and special system wire joints: Use ideal, Buchanan, 3M, or similar tool-applied or twist-on type connectors.
2. All other wire joints: Use Ilsco tin plated aluminum type pressure connectors, or suitable brass, bronze, or copper pressure type connectors.
3. Insulate all joints and splices with suitable insulating sleeves or caps integral with the connectors or separate therefrom, or with vinyl plastic insulating tape.

2.05 TRANSFORMERS (600 VOLTS AND LESS)

A. Transformers shall be Westinghouse, General Electric, Hevi-Duty, Sorgel, or as approved enclosed dry type, each with at least 2-1/2% FCAN taps, NEMA standard sound level, and 150 C. maximum temperature rise.

2.06 PANELBOARDS

A. General: Panelboards shall be Westinghouse, Square D, ITE, General Electric, or as approved, circuit breaker or fusible switch type as specified below. Capacities, quantities of overcurrent protective devices, mounting type (surface or flush), and special requirements (if any) for each panelboard shall be as indicated on drawings. Each panelboard shall have a lockable door with a circuit director card and card holder. All panelboards shall be keyed alike; furnish one key for each lock; deliver these to the Owner's authorized representative, and obtain his signed receipt therefore. Where 2 or more flush panelboards are mounted side-by-side, boxes and trims of all panelboards in each individual group shall be same size and type.

1. Unless otherwise indicated or otherwise specified, load centers shall not be permitted.

B. Types of Panelboards: Each panelboard shall be of type required to accommodate application involved, and indicated or available fault current at panelboard. Overcurrent protective device type shall be:

1. Branch circuit panelboards: Molded case circuit breakers. Where indicated or required, circuit breakers shall have ground fault tripping devices.
2. Distribution panelboards: Molded case circuit breakers.

C. Circuiting: Circuit numbers shown on drawings indicate specific panelboard to which each branch circuit shall be connected, and specific outlets which shall be connected to each branch circuit, and unless otherwise indicated, these circuit numbers do not necessarily indicate actual number to same numbered branch circuit, and connect each branch circuit, and connect each branch circuit to indicated

panelboard. In each individual panelboard:

1. Balance active circuits on panelboard busses, and leave spare circuit breakers equally divided among panelboard busses, as nearly as practicable.
2. Connect each underground wire of each 3 and 4 wire common neutral circuit to a different panelboard bus.
3. Group conveniently at top of panelboard all breakers used for switching lights not having wall or other switches, and neatly pained handles of all such breakers with white durable quick-drying automobile touch-up or other similar type lacquer for each identification as light switches. This does not apply to any panelboard in which ALL circuit breakers serve as lighting switches.

2.07 DISCONNECT SWITCHES, MOTOR STARTERS, AND SEPARATE CIRCUIT BREAKERS

A. General: Except as otherwise specified below, Electrical Section shall provide disconnect switches, circuit breakers, and motor starters for all motors and other electrically operated equipment regardless of who furnishes and/or installs that equipment. Types and locations are not indicated.

1. These devices which are located on other equipment shall be as specified under the corresponding headings; these devices NOT located on other equipment shall be as specified below, and shall be separately mounted.
2. Separately mounted disconnect switches, circuit breakers, and motor starters shall be Westinghouse, General Electric, Square D, Allen-Bradley, ITE, or equal. Enclosure types shall be: NEMA 3R for devices exposed to weather; NEC required type for devices in other special locations; and NEMA 1 type for devices in other locations. Each circuit breaker and each disconnect switch, including those integral with motor starters, shall have padlocking means.

B. Disconnect Switches: These shall be: non-fused safety switches where overcurrent protection is required; and fused safety switches or circuit breakers (as indicated) where overcurrent protection is required; except that other suitable properly rated switches may be used for fractional hp motors and other small loads.

C. Circuit Breakers: These shall be molded case type.

D. Manual Motor Starters: These shall have neon motor-running pilot lights and proper size overload protective devices for the motors involved; and shall be surface mounted in equipment rooms and unfinished areas, and flush mounted in finished area. Where manual motor starters are not indicated, small manually controlled motors shall be controlled directly by the panelboard circuit breakers.

E. Magnetic Motor Starters: Each of these shall have built-in devices as indicated, and

shall have in each pole a separate overload protective device of proper rating for the motor controlled by the starter. Except as otherwise specified below, each magnetic starter shall have a built-in control circuit transformer to supply 120 volts to the control circuit. All control circuits extending outside of starter enclosures shall operate on overcurrent-protected 120 volts.

1. Built-in control circuit transformers shall be omitted: where 120 volts is available directly from motor feeder within starter enclosure; where one or more 120 volt control circuits from sources outside of starter enclosures are indicated; and where ALL control devices and control circuitry are contained entirely within the starter enclosure, in which case the holding coil and control devices may operate directly on the motor feeder voltage.

2.08 MOTOR CONTROL CENTERS - WHERE SHOWN:

A. Motor control centers shall be Westinghouse, Square D, ITE, General Electric, or equal standing metal enclosed assemblies, NEMA Type B Class I construction with 20" x 90" sections, complete with copper or aluminum busses, fused disconnect switches, motor starters, pilot lights, selector switches, and other devices, of the types, sizes, quantities, electrical characteristics, capacities, and suggested arrangements as indicated. Each entire motor control center shall be completely assembled, bussed, wired, and finish painted at the factory into sections to facilitate shipment to the job site, ready for field assembly and installation.

B. Disconnect Switches, Selector Switches, Pilot Lights, and Other Devices: Each magnetic started shall be provided with a fused disconnect switch, and a selector switch, as indicated. Each selector switch shall be provided with a red pilot light to indicate motor running and a green pilot light to indicate motor not running. All pilot lights shall be transformer type, with 6-8 volt lamps in place. Each disconnect switch shall have padlocking means.

C. Overload Protective Devices: Each fuse and each magnetic starter and fuse overload protective device shall be of the proper size to serve the motor or other item controlled thereby. Each 3 phase starter shall have 3 overload protective devices (one in each phase).

D. Holding Coils and Control Circuits: These shall operate on 120 volts.

E. Control Circuit Transformers: Except where 120 volts are directly available from the motor control center supply feeder, each individual motor starter shall have a separate built-in control transformer to supply the required 120 volts for the control circuit. Control circuits shall have overcurrent protection as required by NEC.

F. Identification: Identify each selector switch and each pilot light with the proper legend plate. Identify each other device and control with a laminated plastic nameplate engraved with the designation of the equipment controlled thereby, and

securely attached to the device door.

G. Shop Drawings: Before fabrication, submit shop drawings of proposed motor control centers, and a complete schedule of proposed identification data.

2.09 WIRING DEVICES

A. General

1. Wiring devices shall be Bryant, Hubbell, Arrow-Hart, Leviton, Sierra, Slater, General Electric, or other makes as approved or as specified below. Types of wiring devices required for this project shall be as indicated on the drawings, or suitable for the application involved if type is not indicated; qualities, ratings, and other requirements of wiring devices shall be as specified below. All wiring device types specified below may not necessarily be required for this project; disregard specifications for devices which are neither indicated nor required for this project.
2. Receptacle configurations shall conform to NEMA standards.
3. Exposed finishes shall be: for each device with a plastic plate, same color as plate; for devices with stainless steel plates, ivory or brown; and for all other devices, brown or black.

B. Devices: Qualities, ratings, and other requirements shall be:

1. Wall switches: 20A 120-277VAV, single or double pole, 3 or 4-way as applicable; Bryant 4900 series; Hubbell 1220 series; A-H 1991 series. Where indicated as WEATHERPROOF, the above-specified switch in FS Condulet, with Bryant 7420, Hubbell 7420, or A-H 7420 spring door cover.
2. Wall switches with pilot lights: 15A 120-277VAC switch with neon pilot light; Bryant 4641 and 1375; A-H QST1 and T1720.
3. Duplex receptacles: 20A 125V 2 pole 3 wire grounding; Bryant 5352; Hubbell 5362; A-H 5735-S. Where indicated WEATHERPROOF, the above-specified duplex receptacle in FS Condulet, with Bryant 868, Hubbell 5206, 0r A-H 4500 double lift spring door cover.
4. Ground fault circuit interrupter receptacles: 20A 125V feed-thru duplex 5 ma sensitivity type with test and reset buttons; A-H 1591-F; Leviton 6398.
5. Single receptacles: 20A 125V 2 pole 3 wire grounding; Bryant 5361; Hubbell 5361; A-H 5861.
6. Single receptacles: 20A 250V 2 pole 3 wiring grounding; Bryant 5461; Hubbell 5461; A-H 9861.
7. Heavy duty receptacles: 250V 2 pole 3 wire grounding, 30A or 50A as required; Bryant 9630FR and 9650FR; Hubbell 9330 and 9367; A-H 5700 and 5709.
8. Flush floor receptacles: 20A 125V 2 pole 3 wire grounding; above specified single receptacle with Steel City 889 and P90-2 receptacle and floor plates.
9. Standing floor receptacles: 20A 125V 2 pole 3 wire grounding; above

specified duplex receptacle in Steel City SFH40 outlet fitting.

10. Clock outlets: 15A 125V 2 pole 3 wire grounding; Bryant 2828-GS; Hubbell 7707-55; A-H 5/08; with stainless steel plate.
11. Other devices not specified above: as indicated on the drawings.

C. Device Plates: Unless otherwise specified or inapplicable to the devices involved, plates shall be: emergency circuit devices, red plastic; toilet and lavatory rooms, satin finish stainless steel; other finished areas, ivory plastic; and unfurnished areas, brown plastic for flush devices, and zinc coated steel for surface devices.

PART 3 EXECUTION

3.01 INSTALLATION

A. Run exposed conduit, trays, and other wireways parallel to the principal parts of the building. Wireways shall be run concealed when provisions are made in floors, walls, ceilings, and chases through all finished areas.

B. Conduits and other raceways shall be kept as close as possible to ceilings, walls, columns, etc., and shall be installed in such an orderly manner as to take up a minimum of space and allow a maximum of headroom.

C. Provide templates, layouts drawings, and supervision to ensure correct placement of anchors in concrete.

3.02 MEASUREMENT AND PAYMENT - ELECTRICAL WORK

A. When provided for on the Bid Form, payment for Electrical Work as above specified shall be paid for at the Contract lump sum price. When not provided for on the Bid Form, payment for Electrical Work shall not be made directly, but shall be included in the payment for the items with which it is associated.

END OF SECTION

SECTION 26 56 19

HIGHWAY LIGHTING

PART 1 GENERAL

1.01 WORK INCLUDED

A. Installing lighting systems including standards, conductor cable, conduit, luminaires, service poles, and all accessories needed for the lighting system.

PART 2 PRODUCTS

2.01 GENERAL REQUIREMENTS

A. Lighting materials shall consist of new materials, which meet applicable Tennessee Department of Transportation, AASHTO, and ASTM Standards.

B. Furnish the City Engineer or his agent a list of materials proposed for use, prior to construction.

C. Upon request, furnish samples of materials and/or notarized certificate by the manufacturer that the materials meet the requirements of these specifications and referenced standards.

2.02 SPUN ALUMINUM LIGHTING STANDARDS

A. An aluminum shaft having a base welded to the lower end complete with anchor bolts.

B. Castings:

1. All structural castings - Aluminum Association Alloy 356-T6.
2. Non-structural castings - Alloy No. 43.
3. Sand castings - ASTM B-26. Permanent mold castings - ASTM B-108.

C. Shaft: spun from one piece of seamless tubing Alloy 6063, conforming to ASTM B221, with a post fabrication strength of T6 temper.

D. Anchor base: one-piece cast aluminum, welded to the lower end of the shaft by the Metallic-Arc-Consumable-Electrode-Inert Gas-Shielded Process.

E. When transformer bases are specified, cast of Aluminum Association Alloy 356-T6, conforming to ASTN B-26 or B-108.

F. When bracket arms are specified, fabricate from aluminum alloy pipe or tapered tubes.

1. Pipe: Schedule 40 pipe of Aluminum Alloy 6063-T6, ASTM B-241.
2. Tapered tubes: Aluminum Alloy 6063-T6, ASTM B-221.
3. Cast aluminum clamps: Cast of Alloy No. 43.

G. Anchor bolts: High strength structural bolts conforming to ASTM A-325 and zinc coated conformance with ASTM A-153.

H. Hardware (bolts, nuts, and washers): Aluminum or stainless steel.

2.03 STEEL LIGHTING STANDARDS

A. A steel shaft having a base welded to the lower end complete with anchor bolts.

1. Gray iron castings: ASTM A-126, Class A, A 48, or Class 20.
2. Steel castings: ASTM A-27, Grade 65-35.

B. Anchor bases: One-piece cast construction, secured to the lower end of the shaft by two continuous electric arc welds.

C. The shaft may have only one longitudinal electrically welded joint and shall not have any intermediate horizontal joints or welds. The shaft shall be fabricated from not less than No. 11 gauge corrosion resistant steel conforming to ASTM A-242 or ASTM A-375. Cold roll after fabrication to flatten the weld. The shaft shall have a minimum guaranteed yield strength of 48,000 psi.

D. When bracket arms are specified, fabricate from nominal two inch diameter, or larger, Schedule 40 pipe conforming to ASTM A-120 and galvanized in accordance with ASTM A-386 and A-385.

E. Anchor bolts: as specified for spun aluminum standard.

F. Hardware (bolts, nuts, and washers): stainless steel.

G. Steel light standards shall be galvanized in accordance with ASTM A-123. Galvanizing of hardware and anchor bolts shall meet the requirements of ASTM A-153.

2.04 CONDUCTOR CABLE

A. The size and type of conductor cable shall be as shown on the Plans and shall be in compliance with the National Electrical Safety Code, and local codes.

B. The conductor cable shall conform to applicable ASTM Specifications as follows:

Material	Designation
Tinned Soft or Annealed Copper Wire for Electrical Purposes	ASTM B-33
Concentric-Lay-Stranded Copper Conductors, Hard, Medium Hard, or Soft	ASTM B-8
Lead-Coated and Lead-Alloy-Coated Soft Copper Wire for Electrical Purposes	ASTM D-189
Polyethylene Insulated Wire and Cable	ASTM D-1351
Ozone-Resisting Butyl Rubber Insulation for Wire and Cable	ASTM D-574
Synthetic Rubber Performance, Moisture-Resisting Insulation for Wire and Cable	ASTM D-1521
Synthetic Rubber Insulation for Wire and Cable, 90 degree C. Operation	ASTM D-1523
Synthetic Rubber Heat and Moisture Resisting Insulation for Wire and Cable, 75 Degree C.	ASTM D-1679
Heavy-Duty Black Neoprene Sheath for Wire and Cable	ASTM D-752
General Purpose Neoprene Sheath for Wire and Cable	ASTM D-753

C. Sample and test the cable by the procedures outlined in ASTM D-470.

2.05 PREASSEMBLED CABLE AND DUCT

A. Two rubber insulated neoprene sheathed conductors meeting the requirements of article 2.04, laid parallel and preassembled in a polyethylene duct.

B. Polyethylene duct: manufactured from medium density polyethylene and flexible enough to allow easy coiling and uncoiling at 10° C, meeting the following requirements:

Property	Requirement	Test Method
Tensile Strength	2500 psi Minimum	ASTM D-638
Elongation	400 % Minimum	ASTM D-638
Melt Index	0.5 Maximum	ASTM D-1238
Carbon Black Content	1.0 to 3.0 %	ASTM D-1603
Density of Base Resin	0.926-0.940	ASTM D-1505
Brittle Temperature - 80% Non-Failure	-75 degrees C.	ASTM D-746
Environmental Stress crack resistance maximum failure per 10 specimens after 48 hours	2	ASTM D-1693
Impact Resistance, Method A	0.9 ft. lbs./inch of notch	ASTM D-256

2.06 METALLIC CONDUIT

A. Rigid Steel Conduit: Conform to FSS WW-C-581 or ASA C-80.1 and either hop dip galvanized, metallized galvanized, electro-galvanized, or sherardized.

B. Flexible Metal Conduit: FSS WW-C-566, galvanized.

C. Aluminum Conduit: FSS WW-C-540.

D. Welded Steel Pipe: Hot dipped galvanized inside and out conforming to ASTM A-120.

2.07 NON-METALLIC RIGID CONDUIT

A. Conform to Federal Specifications for conduit and fittings:

1. Bituminized homogeneous fiber, FSS W-C-581;
2. Bituminized fiber laminated wall, FSS W-C-575;
3. Asbestos cement or fire clay cement, FSS W-C-571;
4. Plastics, FSS L-C-740.

2.08 METALLIC CONDUIT FITTINGS

A. Galvanized steel conforming to WW-C-581, or ASA C 80.4.

2.09 LUMINAIRES AND LAMPS

A. Luminaires shall be complete including ballast, lamps, insulating transformer, when

required, and incidental hardware and wiring.

B. The luminaires shall include high pressure sodium light sources as indicated on the Plans.

2.10 FITTINGS, PULL BOXES, AND BENDS

A. Conform to requirements of the National Electrical Code, and be compatible with adjacent conduit and materials.

2.11 RELAYS, SWITCHES, CONTROL CABINETS

A. Conform to the requirements of the National Electrical Code with details shown on the Plans.

2.12 WOOD SERVICE POLES AND CROSSARMS

A. Treated Southern Pine, of the dimensions shown on the Plans, conforming to ASA 05.1.

B. The poles shall be treated with either creosote oil conforming to ASTM D390 or penthachloro-phenol in petroleum solvent in accordance with ASTM D-1272.

C. Sampling and testing of preservative: FSS TT-W-571.

2.13 GUYING HARDWARE

A. Zinc-coated wire strand, zinc-coated anchor rod, four-way expanding anchor and accessories.

B. Wire strand: ASTM A475.

C. The anchor rod, anchor and accessories shall be hot-dipped galvanized.

2.14 GROUNDING MATERIALS

A. As shown on the Plans.

2.15 SPLICING MATERIALS

A. As shown on the Plans.

2.16 DRAG WIRE

A. 9-gauge galvanized iron wire, unless otherwise specified.

2.17 PHOTOELECTRIC RELAYS

A. As shown on the Plans.

PART 3 EXECUTION

3.01 INSTALLATION

A. Install roadway lighting systems at the locations shown on the drawings.

B. Furnish all material and perform all work in strict accordance with the latest revision of the National Electrical Code, and National Electrical Safety Code, and the codes, regulations, and rules prevailing in the area in which the work is being performed, insofar as they apply.

C. All equipment necessary for the satisfactory performance of the work shall be on the project and approved before construction shall be permitted to begin.

3.02 MEASUREMENT AND PAYMENT

A. Lighting systems shall not be measured for payment.

B. When provided for on the Bid Form, lighting systems as above stipulated shall be paid for at the Contract lump sum price. When not provided for on the Bid Form, payment for lighting systems shall not be made directly, but shall be included in the payment for the items with which it is associated.

END OF SECTION

SECTION 27 00 00

COMMUNICATIONS

PART 1 GENERAL

1.01 WORK INCLUDED

A. The work required under this Section includes all work required to provide complete and functioning telemetry systems to tie the remote pump stations back to the control room in the existing sewage treatment plant and to provide an automatic dialer to notify maintenance by telephone if a problems exists.

B. The work of this Section is subject to the requirements of Section 16000, General and Special Conditions.

1.02 RELATED WORK

A. Section 16000: Electrical Work

B. Section 15000: Packaged Pump Station

C. General and Special Conditions (Supplemental)

PART 2 PRODUCTS

2.01 TELEMETRY SYSTEM

A. General: Provide conduits, coaxial cables, outlets, remote terminal units, antennas, and other items as indicated and/or required for a complete and functioning system to interface with the existing repeater and control station.

B. Conduit: as specified herein before, 1” minimum.

C. Coaxial Cables: These shall be type RG8-A/U-C17D similar to Belden series 9251, nominal 52 ohms impedance, cut to length indicated and/or required, complete with type N fittings as indicated.

D. Remote Terminal Unit (RTU): These shall be Turbitrol Model 2605 in NEMA 12 enclosure suitable for the mounting indicated at each location. The RTU's shall be fully compatible with the existing central monitoring system.

E. Remote Radio Transceiver: These shall be Turbitrol Model 2610. The system shall utilize a frequency as allocated and described under Radio Frequency Acclimation hereinafter.

1. If the frequency licensing timing extends beyond the requirements for system delivery, the system shall operate over leased voice grade telephone lines which shall be furnished by the Contractor at no additional expense to the Owner. Upon receipt of frequency licensing the systems shall be fitted with the necessary radio hardware for radio communication.

F. Radio Survey: The manufacturer shall provide, in submittal form, a Radio Survey for each of the system being supplied. The Owner shall provide the manufacturer with the exact coordinates and elevation of each station as well as those of the repeater site. The RTU paths shall be designed for a calculated operating margin to provide as expected 20 db quieting in the radio receiver 99.9% of the time.

G. Radio Frequency Application: The manufacturer shall provide the Owner with all pertinent information required for FCC licensing. The information shall include the frequency selected based on the Radio Survey and Frequency Coordination. The class of application shall be for operational fixed, telemetering and control.

H. Remote Radio Units: The radio transceiver and battery backup with charger shall each be housed in NEMA 12 enclosures suitable for the mounting indicated. The battery backup shall be capable of 15 minute operation of the system.

1. The transmitter specification shall be as follows:

Frequency Range	132-170 MHz
Frequency Stability	+0.0005% (-30° C to +60° C)
RF Power Output	8 watts @ 12.5 vdc
Emission type	15F2,16F3
Power Supply Voltage	+125 vdc
Operating Range	+10.5 to +14.5 vdc
Power Supply Current	1.8 amps @ 12.5 vdc
Audio Input Impedance	4.7K ohms @ 1K Hz
Audio Input Level	1 KHz for 3.3 KHz dev. 7mv rms
Audio Response	(300-3KHz) +1,-3db of std EIA 6 db/octave
Audio Distortion (max)	6% @ 2/3 rated dev. w/ 1 KHz mod
FM hum	50 db below 2/3 rated dev.
Spurious & Harmonics	60 db below carrier
Transmit ready	2 m sec. (map)

2. The receiver specification shall be as follows:

Frequency range	132-170 MHz
Frequency stability	+0.001% (-30° C to +60° C)
Sensitivity	0.35 v:12 db SINAD 0.50 v:20 db Quieting
Spurious and Image Rejection	70 db below carrier
Noise Squelch Sensitivity	0.25 v.
Adjacent Channel Rejection	80 db (20 db quieting)
Nodulation Acceptance	+7 K Hz
Audio Output Power	500 mw @ 10% distortion
Audio Output Impedance	25 ohms
Power Supply Current	8 ma @ 12 vdc (standby) 87 ma @ vdc (receive)

I. Remote antennas: The antennas shall be pole mountable and have the following characteristics;

Type	Dual 6 element YAGI
Frequency Range	130-175 MHz.
Nominal Impedance	50 ohms
Forward Gain	12 db per 6 element YAGI

1. The exact mounting height and location shall be coordinated with the Radio Survey.

2.02 AUTOMATIC DIALER

A. The automatic dialing alarm system shall be microprocessor based and shall have the capability to monitor 8 dry contact inputs. Each of these inputs shall monitor a relay supplying a set of dry contacts (normally-closed or normally open). In addition, the dialer shall monitor the AC power supplied to it. Upon detecting an alarm on any of its inputs (i.e., normally-closed relay opens or normally-closed relay closes), or detecting loss of its AC power, the dialer shall begin dialing the first of up to sixteen user-programmed telephone numbers.

1. The dialer shall speak user-recorded messages to the called party describing its location and the alarm conditions which are present. The dialer shall then verbally request that an acknowledgment be given. The called party shall acknowledge the call by momentarily depressing the '8' key on their telephone keypad. If the dialer is not acknowledged during the call, it shall hang-up, wait 60 seconds and then dial the next number in its phone list. If a successful acknowledgment occurs, the dialer shall give a sign-off message, hang-up and then wait a use-programmed period of time for the alarm conditions to be corrected. If this period of time elapses and the alarm conditions still exist,

the dialer shall begin the alarm notification cycle again.

2. The dialer shall have a relay output which shall remain energized as long as the dialer has any unacknowledged alarms. This output shall be available to allow for wiring to an external horn, buzzer, light or other local alarm device. Alternatively, the user shall be able to program the dialer to allow remote activation of this relay from a telephone keypad.

B. Basis Functional and Physical Requirements:

1. The dialer's identification and alarm messages shall be user-recordable. These messages shall be capable of being a minimum of 8 seconds in length each, and shall be stored in the dialer's non-volatile. solid-state memory. Dialers which do not allow the user to record messages and have them stored in solid-state memory shall not be considered.
2. The dialer shall have the capability to pulse or tone dial.
3. The dialer shall have capability of being remotely programmed from a telephone keypad.
4. The dialer shall be capable of being programmed to automatically arm and disarm itself based on time-of-day and day-of-week.
5. The dialer shall have the capacity to store up to 8 different list of phone numbers.
6. The dialer shall be housed in an enclosure rated to NEMA 4X or equivalent.
7. The dialer shall have a serial printer port allowing connection of an external serial printer for logging of dialer activity (i.e., events such as alarms, telephone calls placed, whether or not an alarm call-out was successfully acknowledged, etc.). The dialer shall also have a built-in, 2400 bps modem allowing it to communicate to a remote terminal or personal computer. The capability shall be in addition to the dialer's voice notification capability. Using the modem, the dialer shall be able to communicate to off-the-shelf communications software allowing display of the dialer's status including a record of the last 50 input events.
8. The dialer shall have 8 line, 40 character LCD display to provide visual prompts when programming and to display channels in alarm.
9. The dialer shall have internal battery back-up capacity sufficient to allow the dialer to perform its alarm call-out function for a minimum of 12 consecutive hours upon loss of primary AC power.
10. The dialer shall meet FCC Part 65 and Part 15, Class B requirements and shall have a valid FCC registration number per Part 68.
11. Dialer's input circuitry shall employ transformer isolation on each dry contact input channel and shall have been tested and proven by a nationally recognized, independent testing lab to meet or exceed ANSI C37.90.
12. Dialer shall have internal and external surge protection devices for telephone and power.
13. The dialer shall be a Dialog Plus as manufactured by Kaye Instruments of Bedford, Massachusetts.

PART 3 EXECUTION

3.01 TELEMETRY SYSTEM

A. Install each of the RTU's, transceivers, power supplies, antenna, and cables at each of the remote pump stations and interconnect as required demonstrating that all coaxial cable are free from shorts.

B. Demonstrate system operation and compatibility with the existing central system.

C. System shall be complete with all relays, switches panels, junction boxes, floats and any and all equipment for a complete, compatible working system including any and all additions to equipment, software or other electrical electronic equipment located in the existing sewage treatment plant control room for the following:

1. High water alarm
2. Low water alarm
3. Pump run time
4. Gallons per minute pumped
5. Pump failure alarm
6. Momentary push button switch, key lock entry switch and intrusion alarm switch
7. Personnel emergency switch at bottom of manway

D. It shall be the equipment supplier’s responsibility to coordinate all necessary relays, switches, contacts and panels with the pump supplier Section 15000.

3.02 AUTOMATIC DIALER

A. Install at each of the remote pump stations and interconnect as required.

B. Demonstrate system operation and compatibility with all systems.

C. System shall be complete with all relays, switches, panels, junction boxes, floats and any and all equipment for a complete, compatible working system including any an all additions to equipment, software or other electrical electronic equipment.

D. It shall be the equipment supplier’s responsibility to coordinate all necessary relays, switches, contacts and panels with the pump supplier Section 15000.

E. Dialer shall be mounted on the remote pedestal pump control panel or as directed by the City of Kingsport's Project Manager.

3.03 MEASUREMENT AND PAYMENT - TELEMETRY

A. When provided for on the bid form, payment for communications as specified shall be paid for at the per unit cost (each transmitting station). When not provided for on the bid form, payment for communications shall not be made directly, but shall be included in the payment for the item with which it is associated.

3.04 MEASUREMENT AND PAYMENT - AUTOMATIC DIALER

A. Payment for Automatic Dialers shall not be made directly but shall be included in the unit cost for sewer pump station, see Section 15000.

END OF SECTION

SECTION 31 11 00

CLEARING AND GRUBBING

PART 1 GENERAL

1.01 WORK INCLUDED

A. Clearing, grubbing, removal and disposal of vegetation, rocks, roots and debris within the limits of the work except objects designated to remain.

B. Preservation from injury or defacement all vegetation and objects to remain.

C. Stripping and stockpiling of topsoil from all areas within the limits of work where the ground surface is to be modified and the final surface is to be covered with topsoil under this Contract.

1.02 RELATED WORK

A. Specified elsewhere:

1. Section 02 41 00: Demolition
2. Section 31 22 00: Grading and Excavation

1.03 LIMITS OF WORK

A. Rights-of-way and easement areas established by the City Engineer or his agent, and any additional areas as shown on the plans, or deemed necessary by the City Engineer or his agent.

B. Approved borrow pit areas.

C. Designated stockpiles of construction material other than borrow material.

1.04 PROTECTION

A. Take reasonable care during construction to avoid damage to vegetation. Where the area to be excavated is occupied by trees, brush, or other uncultivated vegetable growth, clear such growth from the area and dispose of it in a satisfactory manner. Leave undisturbed any trees, cultivated shrubs, flowers, etc., situated within public rights-of-way and/or easements through private property but not located directly within excavation limits. Transplant small ornamental trees, cultivated shrubs, flowers, etc., located directly within excavation limits so they may be replaced during property restoration operations. Do not remove or disturb any tree larger than 6 inches in diameter without the permission of the City Engineer. Take special

precautions (including the provision of barricades and the temporary tying back of shrubbery and tree branches) for the protection and preservation of such objects throughout all stages of construction; the Contractor shall be held liable for any damage which may result to said objects from excavation or construction operations. Trim any limbs or branches of trees broken during construction operations with a clean cut. Reference City of Kingsport Tree Ordinance, Section 94-406, 407.

B. Protect living shrubs and trees not marked for removal and outside the rights-of-way or easement area by erecting appropriate temporary barricades around said trees and wrapping with burlap as necessary for protection during the construction period; method subject to approval by the City Engineer or his agent. The same protection is to be provided for living shrubs and trees within the right-of-way or easement area and designated to remain by the City Engineer or his agent or on the Plans.

C. Protect bench marks and existing structures, roads, sidewalks, paving and curbs against damage from vehicular or foot traffic.

D. Maintain designated temporary roadways, walkways and detours, for vehicular and pedestrian traffic.

PART 2 PRODUCTS

(NOT APPLICABLE)

PART 3 EXECUTION

3.01 PREPARATION

A. Maintain benchmarks, monuments and other reference points. Re-establish if disturbed or destroyed at no cost to City Engineer or his agent.

3.02 CLEARING AND GRUBBING

A. Clear rights-of-way, easements, borrow pit and other stockpile areas of objectionable material to the ground surface except for trees and stumps. In addition, all trees and stumps in the permanent sanitary sewer easement shall be cleared to the ground surface prior to construction of sanitary sewers, unless otherwise noted on the Plans or directed by the City Engineer or his agent.

B. Cut trees and stumps to within 6 inches of the ground surface or low water level in swampy areas where embankments are to be constructed provided undercutting or other corrective measures are not stipulated.

C. Cut trees and stumps outside the easement area and marked for removal by the City Engineer or his agent to within 6 inches of the ground surface.

D. Remove low hanging, unsound, or unsightly branches on trees or shrubs designated to remain.

E. Trim branches of trees extending over the right-of-way or easement to a clear height of twenty feet above the ground surface.

F. Grub rights-of-way or easement areas of protruding obstructions.

G. Grub borrow pit and stockpile areas of all objectionable material. Strip overburden of the material to be obtained in stockpile areas.

H. Perform clearing and grubbing well in advance of construction or material removal activities.

I. All suitable trees removed from privately owned property shall be cut into fireplace lengths (approximately 20 inches) and neatly stacked adjacent to the easement on the property of the affected landowner, unless otherwise directed by the City Engineer or his agent.

J. Whenever reasonably possible strip topsoil from areas defined in paragraph C of 1.01-Work Included, above. This soil is to be stockpiled along the project in such a manner as to preserve the condition of the topsoil until landscaping operations can take place.

3.03 BACKFILLING AND SURFACE PREPARATION

A. Backfill and compact all depressions resulting from clearing and grubbing with suitable materials in accordance with Section 31 22 00.

1. Backfill embankment areas to natural ground elevation.
2. Backfill excavation areas below finished subgrade to finished subgrade.

B. Perform backfilling a satisfactory distance ahead of construction operations.

C. Prepare areas designated on the drawings to receive erosion control matting to smooth surfaces which have been shaped, fertilized, and seeded.

3.04 DEBRIS REMOVAL

A. Promptly remove cleared debris from site.

B. Obtain permission from applicable regulatory authority for disposal of debris to waste disposal site.

C. No burning shall be allowed in connection with this project.

3.05 MEASUREMENT AND PAYMENT - CLEARING AND GRUBBING

A. Measurement of clearing and grubbing area shall not be made, except to confirm compliance to the Plans and these Specifications.

B. When provided for on the Bid Form, payment for clearing and grubbing shown on the drawings or specified herein shall be by the contract lump sum price. When not provided for on the Bid Form, payment for clearing and grubbing shall not be made directly, but shall be included in the payment for the items with which it is associated.

3.06 MEASUREMENT AND PAYMENT - PROTECTION OF LIVING SHRUBS AND TREES

A. Measurement of protection of living shrubs and trees shall not be made, except to confirm compliance to the Plans and these Specifications.

B. When provided for on the Bid Form, payment for protection of living shrubs and trees shall be made by the contract lump sum price, including painting of cut or scarred surfaces. When not provided for on the bid Form, payment for protection of living trees and shrubs shall not be made directly, but shall be included in the payment for the items with which it is associated.

END OF SECTION

SECTION 31 22 00

GRADING AND EXCAVATING

PART 1 GENERAL

1.01 WORK INCLUDED

A. Excavating and grading of:

1. Roadways (including the removal of slides).
2. Borrow pits.
3. Waterways and ditches (including structure inlet and outlet ditches, channels, waterways, etc., event though they extend beyond the highway limits).
4. Intersections.
5. Approaches.
6. Benches under side-hill embankments.

B. Excavating of unsuitable material from roadbed and beneath embankment areas.

C. Excavating selected material found in the roadway which is required for specific use in the construction.

D. Construction and removal of detours.

1.02 RELATED WORK

A. Specified elsewhere:

1. Section 02 41 00: Demolition
2. Section 31 11 00: Clearing and Grubbing
3. Section 31 25 13: Soil and Erosion Control

1.03 CLASSIFICATION OF EXCAVATION MATERIALS

A. Road and Drainage Excavation (unclassified): all excavation regardless of the nature of the excavated material except borrow, channel, undercutting and solid rock excavation provided for in the Bid Form.

B. Borrow excavation: material required for construction and obtained from approved sources outside the rights-of-way limits or other designated areas. Flattening of approved cut slopes graded under previous contracts is permitted for use as borrow provided the material is satisfactory. Borrow material other than solid rock shall be AASHTO A-6 or no worse than the predominant soil type in the roadway excavation, based on AASHTO classification if A-6 is not reasonably available.

Removal and placement of borrow is classified as:

1. Borrow Excavation (solid rock): non-degradable rock which cannot be economically excavated by the proper use of a power shovel or explosives.
2. Borrow Excavation (unclassified): all approved material including Borrow Excavation (solid rock).
3. Borrow Excavation (select material): designated material.

C. Channel Excavation (unclassified): removal and disposal of all material excavated from existing or new channels with a bottom width of more than fourteen feet as shown on the drawings.

D. Road and Drainage Excavation (unclassified); Channel excavation with a bottom width fourteen feet or less, as shown on the drawings.

E. Solid Rock Excavation: An excavation classification only when it is provided for in the Bid Form and defined as follows:

1. Excavation of rock which cannot be economically excavated without the use of explosives;
2. Any rock, boulder, fragment of rock or concrete having a volume of at least 1/2 cubic yard or a fragment excavated from a formation having a volume greater than 1/2 cubic yard.

1.04 REFERENCE STANDARDS

A. Determine maximum density and optimum moisture in accordance with the "Standard Method of Test for Moisture Density Relationship of Soils Using a 5.5 Pound Rammer and a 12-inch Drop", AASHTO Designation T 99, Method A.

B. Compact all designated materials to 95% of maximum density unless otherwise specified.

C. Rock borings or soundings, if provided, are:

1. For information purposes only.
2. No guarantee of existing conditions.
3. No substitute for investigations deemed necessary by Contractor.

PART 2 PRODUCTS

(NOT APPLICABLE)

PART 3 EXECUTION

3.01 PREPARATION

A. Prior to beginning excavation, grading, and embankment operations in any area, install all necessary soil erosion control structures (Section 31 25 13) prior to any clearing, grubbing, and demolition in accordance with
Sections 31 11 00 and 02 41 00.

3.02 EMBANKMENT

A. Construct embankments by placing and compacting approved embankment materials:

1. In reasonably close conformity with the lines, grades, and typical cross-sections shown on the drawings or established by the City Engineer or his agent.
2. Use Road and Drainage, Channel, and Borrow Excavation materials only.
3. Compact the top 6 inches of the roadbed in both cut and fill sections, unless otherwise specified.
4. Place roadway embankment materials consisting predominantly of soil in horizontal layers not to exceed 10 inches in depth and compact each layer.

B. Provide adequate surface drainage for embankments at all times.

3.03 UNDERCUTTINGS

A. Remove and dispose of unsatisfactory materials:

1. Below grade in cut sections.
2. Areas where embankments are to be placed.
3. Below the foundation elevation of pipe and box culverts.

B. Stripping, stockpiling and placing of topsoil and step-benching for hillside embankments is not classified as undercutting.

3.04 CLEAN-UP AND DISPOSAL OF DEBRIS - AND EXCESS EXCAVATION

A. Dress for final inspection all excavated and graded areas to within reasonably close conformity to the lines, grades and cross-section shown on the drawings:

1. Producing a uniform, satisfactory finish.
2. Scale rock cuts of all loose fragments and leave in a neat, safe and workmanlike condition.
3. Clean the entire rights-of-way or easement of all vegetation unless otherwise

specified on the drawings.

4. Clear and clean all structures of all objectionable materials and obstructions.
5. Perform final dressing prior to sodding or seeding operations when these items are in the Contract.

B. Dress spoil banks, waste areas, etc., in a satisfactory manner.

C. Dispose of excess material created by trimming slopes, resloping, and shaping outside the rights-of-way.

D. Promptly remove cleared debris from site.

E. Obtain permission from applicable regulatory authority for disposal of debris to waste disposal site.

F. Satisfactorily dispose of all excess excavated material by hauling to the City's landfill, unless otherwise directed by the City Engineer or his agent. No separate payment shall be made for disposal of waste materials, all costs incidental thereto shall be included in the contract price for associated work. Unless otherwise noted all fees shall be the contractor's responsibility.

3.05 MEASUREMENT AND PAYMENT

A. The City Engineer or his agent shall: Measure accepted excavation in its original position on the basis of the cubic yard by cross-sectioning the area excavated. Determine cross-sections by conventional manual surveys, aerial surveys, or a combination of the two. Compute volumes from the cross-section measurements by the average end area method.

1. No measurement for payment for hauling of excavation and borrow materials shall be made except overhaul of Road and Drainage Excavation (unclassified or additional material) which shall be paid for as provided below.
2. Measurement for payment of road and drainage excavation (unclassified) shall include over-breakage of rock not attributable to carelessness of the Contractor which has been removed and disposed of.
3. Measurement for payment of excavation required to bench side-hill slopes of embankments shall be in accordance with the following requirements:

   a. Excavation in solid rock shall be paid for as Road and Drainage Excavation (unclassified) whether the excavation material is bladed and dozed or picked up and hauled.

   b. Excavation other than solid rock shall be paid for as Road and Drainage Excavation (unclassified) only when it is picked up and hauled.

4. Measurement for payment of any Grading and Excavation item shall be made directly only when it is provided for on the Bid Form. When not provided for on the Bid Form, payment for any grading and excavating shall be included in the payment for the items with which it is associated.
5. Excavation required to correct slides or prevent potential slides, provided blasting is not required, and the dressing, reshaping or flattening of the affected slopes shall be paid for as Road and Drainage Excavation (additional material):

    a. At a rate equal to 1.2 times the unit price bid for road and drainage excavation (unclassified).

    b. If it becomes necessary to flatten a slope to correct a slide or prevent a potential slide after the cut has been started but not completed, payment under Road and Drainage Excavation (additional material) shall be limited to material removed by the original staked slope lines and the newly established slope line above the elevation to which the cut has been made.

    c. Seeding, sod and other incidental items required to repair the slide area shall be paid for at the contract unit price bid for the respective items.

B. Payment for accepted quantities of excavation and grading as provided above and when provided for on the Bid Form shall be at contract unit price for:

1.	Excavation	Per cubic yard
2.	Embankment	Not be paid for directly
3.	Borrow Excavation (Unclassified)	Per cubic yard
4.	Borrow Excavation (Solid Rock)	Per cubic yard
5.	Borrow Excavation (Select)	Per cubic yard
6.	Channel Excavation	Per cubic yard
7.	Undercutting	Per cubic yard
8.	Finishing	Not be paid for directly
9.	Clean-up	Not be paid for directly
10.	Solid Rock Excavation (if provided on Bid Form)	Per cubic yard

END OF SECTION

SECTION 31 22 16

BASE AND SUBGRADE TREATMENT

PART 1 GENERAL

1.01 WORK INCLUDED

A. Preparing and stabilizing subgrade to receive a base or pavement.

B. Placing and compacting base material.

C. Placing and compacting stabilized base.

1.02 RELATED WORK

A. Specified elsewhere:

1. Section 31 11 00: Clearing and Grubbing
2. Section 31 22 00: Grading and Excavating
3. Section 32 13 13: Portland Cement Concrete Pavement

1.03 REFERENCE STANDARDS

A. Compact all Subgrade materials to 100% of maximum density unless otherwise specified.

1. Determine maximum density and optimum moisture in accordance with the "Standard Method of Test for Moisture Density Relationship of Soils Using a 5.5 Pound Rammer and a 12-inch Drop", AASHTO Designation T 99, Method A.

B. Compact Type I Base materials to an average dry density of at least 100% of theoretical density based upon 83% of a solid volume, unless otherwise specified.

1. No individual test shall be less than 97% of theoretical density.
2. The theoretical density of limestone aggregates shall be based on bulk specific gravity AASHTO T-85.
3. The theoretical density of all other aggregates shall be based on bulk specific gravity AASHTO T-84 and T-85.

C. Compact Type II Base materials to at least 95% of maximum density, unless otherwise specified.

1. No individual test shall be less than 92% of maximum density.
2. Determine maximum density and optimum moisture in accordance with the "Standard Method of Test for Moisture Density Relationship of Soils Using a 5.5 Pound Rammer and a 12-inch Drop", AASHTO Designation T 99, Method D.

PART 2 PRODUCTS

2.01 MINERAL AGGREGATE MATERIALS - GENERAL

A. Mineral aggregate: sound, tough, and durable fragments of crushed stone, crushed slag, crushed or uncrushed gravel or chert.

B. Fine aggregate: natural sand, silt-clay or other inert materials with similar characteristics conforming to AASHTO M-6, M-29 and M-45 requirements except as specified herein.

C. Coarse aggregate: AASHTO M-43, except as specified herein, consisting of crushed stone, crushed slag, crushed or uncrushed gravel, crushed or uncrushed chert, or a combination thereof, or other inert materials with similar characteristics, having hard strong durable pieces free from adherent coatings.

D. Coarse aggregates: graded to standard sizes between the limits specified and to the gradation requirements set forth in the table on the following page:

903.22 - Sizes of Coarse Aggregate AASHTO M-43

Size No.	Nominal Size Sq. Openings (1)	Amounts Finer Than Each Laboratory Sieve (Square Openings) Percentage by Weight														
		4	3 ½	3	2 ½	2	1 ½	1	3/4	½	3/8	#4	#8	#16	#50	#100
1	3 1/2-1 ½	100	90-100		25-60		0-15		0-5							
2	2 1/2-1 1/2			100	90-100	35-70	0-15		0-5							
24	2 1/2-3/4			100	90-100		25-60		0-10	0-5						
3	2-1				100	90-100	35-70	0-15		0-5						
357	2-No. 4				100	95-100		35-70		10-30		0-5				
4	1 1/2-3/4					100	90-100	20-55	0-15		0-5					
467	1 1/2-No.4					100	95-100		35-70		10-30	0-5				
5	1-1 ½						100	90-100	20-55	0-10	0-5					
56	1-3/8						100	90-100	40-75	15-35	0-15	0-5				
57	1-No. 4						100	95-100		25-60		0-10	0-5			
6	3/4-3/8							100	90-100	20-55	0-15	0-5				
67	3/4-No.4							100	90-100		20-55	0-10	0-5			
68	3/4-No.8							100	90-100		30-65	5-25	0-10	0-5		
7	1/2-No.4								100	90-100	40-70	0-15	0-5			
78	1/2-No.8								100	90-100	40-75	5-25	0-10	0-5		
8	3/8-No.8									100	85-100	10-30	0-10	0-5		
89	3/8-No.16									100	90-100	20-55	5-30	0-10	0-5	
9	No.4-No.16										100	85-100	10-40	0-10	0-5	
10	No.4-0(2)										100	85-100				10-30

(1) In inches, except where otherwise indicated. Numbered sieves are those of the United States Standard Sieve Series.
(2) Where Size No. 10 (Screenings) is specified in asphalt pavement design the per cent passing the No. 4 sieve shall be 90 -100 and the percent passing the No. 200 sieve shall be from 5-16.

2.02 SUBGRADE STABILIZATION MATERIAL

A. Thoroughly pulverize and mix all subgrade and aggregate material until not more than 5% of the material exclusive of gravel or stone is retained on a 2" sieve.

B. Add sufficient water during the mixing and compacting operation to provide optimum moisture content, a determined by AASHTO T 99, +/-3%.

2.03 MINERAL AGGREGATE BASE MATERIALS

A. Base aggregates shall conform to the requirements of article 2.01 and shall be of two classes: Type I and Type II.

B. Type I aggregate: crushed stone, crushed slag, crushed gravel or crushed chert and other fine grained mineral matter.

1. Crushed stone: free from adherent coatings, clay, or other solid with wear not exceeding 50% and sodium sulphate soundness loss not exceeding 15%.
2. Crushed slag: quality as for crushed stone having a uniform density.
3. Crushed gravel and chert: screened and all oversize material crushed and fed back over the screen in a uniform manner.
4. Coarse aggregate wear for those retained on the No. 4 sieve shall not exceed 30%.
5. Material passing the No. 40 sieve: non-plastic, or with a liquid limit not exceeding 25 and a plasticity index not exceeding 6.
6. Only grading D aggregate shall be used.

C. Furnish test reports on quality of all aggregates for approval by the City Engineer or his agent prior to blending or mixing. If requested by the City Engineer or his agent, furnish samples for testing by an independent laboratory. Test methods for aggregate base quality shall be by the following AASHTO methods:

Test	Method
Sampling	T-2
Percentage of wear	T-96
Soundness	T-104
Unit weight	T-19
Sieve analysis	T-27

2.04 CEMENT STABILIZED BASE MATERIALS

A. The City Engineer or his agent shall determine the proportions of materials to be used which produce a workable lean concrete.

1. Maximum design slump of 1-1/2 inches, AASHTO T-119.
2. Minimum compressive strength of 500 psi in 7 days.

3. Cement content of 200 pounds per cubic yard of concrete.
4. Maximum entrained air of 5%.
5. Water reducer quantity as recommended by the manufacturer.
6. Other applicable requirements as stipulated in Section 32 13 13.

PART 3 EXECUTION

3.01 PREPARATION

A. Clear construction areas as stipulated in Section 31 11 00.

B. Maintain benchmarks, monuments and other reference points.

3.02 SUBGRADE PREPARATION

A. Prepare subgrade in reasonably close conformity with the lines and grades as shown on the drawings or as designated by Engineer of Record.

B. Haul, spread and compact suitable material in sufficient quantity when the roadbed is below grade.

C. Prepare subgrade across the entire sub-base section when sub-bases are to be constructed on the subgrade.

D. Construction subgrade 12 inches wider on each side of the base or pavement when forms are required for the base or pavement.

E. Clear subgrade, as stipulated in Section 31 11 00, requiring reworking to the limits described above.

F. Grade subgrade in such a manner as to provide ready drainage of water from the subgrade. Maintain ditches and drains during construction.

3.03 SUBGRADE COMPACTION

A. Compact the finished subgrade to not less than 100 % of the maximum density.

B. When the density requirement is not met, loosen the subgrade by disking, harrowing or other approved methods to a depth of not less than 6 inches, then reshape and recompact.

C. Moisten and aerate the subgrade material as necessary during mixing and compacting to provide optimum moisture content.

D. Rework or remove, replace and recompact all soft, yielding material which does not compact readily.

E. Protect subgrade from damage and limit hauling over the finished subgrade to that which is essential for construction purposes.

F. Smooth and recompact all ruts or rough places which develop in a completed subgrade.

G. Check the lines, cross-sections and grades of the subgrade as completed for reasonably close conformity with those shown on the drawings for the bottom of the sub-base, or pavement, or with those established by Engineer of Record.

3.04 SUBGRADE STABILIZATION

A. Add and incorporate granular stabilizing material, with or without additives as required, into the existing subgrade.

B. Replace unsuitable subgrade material with stabilizing material in reasonably close conformity to the widths and depth shown on the drawings or as directed by the City Engineer or his agent.

C. Spread the quantity of aggregate for subgrade treatment, as designated on the drawings or as directed, by means of a mechanical spreader and thoroughly mix with the subgrade material by means of a mechanical mixer. Spreading and mixing may be performed by other approved methods on short sections to be stabilized, when permitted by the City Engineer or his agent.

D. Spread material uniformly by motor grader to the required cross-section and compact. Accompany compaction operations with sufficient blading by motor graders to assure a smooth, uniform surface.

E. Maintain the complete subgrade until covered by the following stage of construction or until the project has been completed and accepted.

3.05 PLACING AGGREGATE BASE

A. Place one or more courses of aggregates, and additives, if required, on a prepared subgrade in reasonably close conformity with the lines, grades, thicknesses, and typical cross-sections show on the drawings or established by the City Engineer or his agent.

B. Construct mineral aggregate base in one or more layers with a compacted thickness as shown on the drawings.

C. The subgrade shall be checked and approved by the City Engineer or his agent at least 500 feet in advance of spreading any mineral aggregate. This distance may be shortened by permission of the City Engineer or his agent to as little as 200 feet

between November first and April first or during periods of prolonged wet weather.

D. Mineral aggregate bases shall not be spread on a subgrade which is frozen or contains frost.

E. Hauling over material already placed shall not be permitted until it has been spread, mixed, shaped, and compacted to the required density.

3.06 MIXING AND SPREADING AGGREGATE BASE

A. Unless otherwise specified, mix and spread base course materials, including additives if required on the drawings. Furnish sieve analyses of mix gradations for all materials for approval by Engineer of Record prior to beginning work. Methods of sampling and testing shall be in accordance with current AASHTO requirements.

B. Stationary Plant Method - For Type I or II base materials.

1. Mix and add water in an approved stationary mixing plant capable of producing a well graded mix.
2. Add water and calcium or sodium chloride, if specified, during the mixing operation in the amount necessary to provide a moisture content satisfactory for compacting.
3. If combining of materials is required to meet the grading requirements, blend prior to mixing by uniformly adding the material. Blending of materials in stockpiles shall not be permitted.
4. All material fed into the plant shall travel the full length of the pugmill.
5. After mixing, transport the material for each layer of base to the job site while it contains the proper moisture content, and spread to the required thickness and cross-section by means of an approved mechanical spreader.
6. Test samples may be taken from the conveyor feeding the mixer or from the mixer output.

C. Road Mix Method (Mechanical Mixer) - For Type II base materials.

1. Place the material for each layer of base course through an aggregate spreader or windrow-sizing device capable of being adjusted to spread the materials in the proper proportions.
2. After placing, mix the material with an approved mechanical mixing machine of rotary or pug mill type capable of producing a uniform blend.
3. During mixing, add water in the amount sufficient to provide a moisture content satisfactory for compacting.
4. If two or more materials are to be blended on the road, spread each material separately in the necessary proportion prior to blending and mixing, unless moisture control additives are specified.
5. If two or more materials are blended, test samples shall be taken after mixing and before compaction. If blending is not required, test samples may be taken

from plant production or stockpiles.

D. Road Mix Method (Motor Grader) - For Type II base materials.

1. After depositing and uniformly spreading the material for each layer of base course, sprinkle it with water in sufficient quantity to moisten all particles, but not in such quantity that segregation of sizes or softening of the subgrade shall occur.
2. Immediately following the application of water, thoroughly mix the material by windrowing and spreading with motor graders until the mixture is uniform throughout, unless moisture control additives are specified or if two or more materials are to be blended.
3. Spread the base material while at optimum moisture content in layers of specified thickness and cross-section by means of approved motor graders.
4. If the required compacted depth of the base course exceeds 6 inches, construct the base in two or more layers of approximate equal thickness. The maximum compacted thickness of any one layer shall not exceed 6 inches except when vibrating or other approved types of special compacting equipment are used. The compacted depth of a single layer of the base course may be increased to 8 inches upon approval of City Engineer or his agent.
5. Immediately following spreading, shape the base material to the required degree of uniformity and smoothness.
6. Compact to the required density prior to any appreciable evaporation of surface moisture. Continuously compact each layer until the minimum density requirement is achieved.
7. Test samples may be taken from stockpiles or plant production.

3.07 COMPACTING AGGREGATE BASES

A. For compaction testing purposes, each completed layer shall be divided into lots of approximately 10,000 square yards. Smaller lots may be considered when approved by the City Engineer or his agent.

B. Five density tests shall be performed on each lot and the results averaged.

3.08 PLACING CEMENT STABILIZED BASE

A. Construct a base of lean concrete on a prepared subgrade or subbase in reasonably close conformity with the lines, grades, thickness and typical cross-section shown on the drawings or as directed by the City Engineer or his agent. Unless otherwise specified, construction shall be performed in accordance with the applicable requirements of Section 32 13 13.

B. Offset longitudinal joints 1' from the portland cement concrete pavement joint with the 1' offset located on the median half of the lean concrete base.

C. Form a butt type joint, as directed by the City Engineer or his agent, at the end of

each day's operation or when there is an interrupt paving operations.

D. Consolidate by the use of vibratory equipment.

E. Finish the surface to a uniformly closed texture. After strike-off and consolidation, no additional finishing shall be required except that needed to maintain grade alignment and provide the close texture.

F. Insure that the lean concrete base grade alignment is such that portland cement concrete pavement thickness is not deficient.

G. Reconstruct or replace, at no expense to the owner, bases with back thicknesses not within 1/2" of those shown on the drawings.

H. Do not place Portland Cement Concrete Pavement upon the base until the mixture has cured for 7 days.

3.09 MEASUREMENT AND PAYMENT - SUBGRADE PREPARATION AND STABILIZATION

A. When payment for subgrade preparation and stabilization is provided for on the Bid Form, measurement for payment of approved subgrade construction and preparation shall be by 100 foot stations measured along the centerline.

B. When provided for on the Bid Form, payment for approved subgrade construction and preparation as above stipulated shall be on the basis of the Contract unit price per 100 foot station. When not provided for on the Bid Form payment for subgrade preparation and stabilization shall not be made directly, but shall be included in the contract unit prices for the items with which they are associated.

3.10 MEASUREMENT AND PAYMENT - AGGREGATE BASES

A. Measurement for payment of mineral aggregate base placed and approved shall be by the ton by weight tickets. Any quantities to be paid for under the item for crushed stone for pavement maintenance and shoulder replacement shall not be included in any quantities to be paid for under the item for aggregate bases.

B. When provided for on the Bid Form, payment for placing and compacting aggregate shall be on the basis of the contract unit price per ton for the various types specified on the Bid Form. When not provided on the Bid Form, payment for aggregate bases shall not be made directly, but shall be included in the payment for the items with which it is associated.

3.11 MEASUREMENT AND PAYMENT - CEMENT STABILIZED BASE

A. Measurement for payment of approved cement stabilized base shall be by the square yard complete in place. No measurement for cement adjustment shall be made.

B. When provided for on the Bid Form, payment for cement stabilized base shall be based on the Contract unit price per square yard for the various thickness classifications stipulated on the Bid Form. Payment for cement adjustment shall be made on the basis of the Contract lump sum price. When not provided for on the Bid Form, payment for cement stabilized base shall not be made directly, but shall be included in the payment for the items with which it is associated.

END OF SECTION

SECTION 31 23 33

TRENCHING, BACKFILLING AND COMPACTION

PART 1 GENERAL

1.01 WORK INCLUDED

A. Trench Excavation

B. Shoring, Bracing, and Sheeting

C. Foundations, Bedding, Hunching, Initial Backfill and Final Backfill

D. Dewatering or Trenches and Excavations

E. In Place Soil and Erosion Control Devices

F. In Place Traffic Control Devices

G. In Place Dust Control

H. In Place safety Control

I. Notification to Utility Companies of Intent to Excavate

J. Compliance With All Local, State, and Federal Laws

1.02 RELATED WORK

A. Special Conditions

B. Supplemental Specifications

C. Occupational Safety and Health Act Standards - Trenching/Excavations 1926.650 - 1926.652 & Appendix A-F

D. Tennessee Blasting Standards Act Section 68-44-101 or Latest Revision

1.03 QUALITY

A. The Contractor shall maintain the surface over the trench or excavation for a period of 1 year after final completion and acceptance of the work, both in public right of way and private property, and shall fill in any settled areas with suitable fill and reseed or with pavement as the location warrants.

B. Backfilling shall not be done in freezing weather except by special permission of the City Engineer or his agent, and it shall not be accomplished with frozen material. No fill shall be made where the material in the trench is already frozen.

1.04 REFERENCES

A. American Society for Testing Materials (ASTM); latest revisions:

1. D698: Test Method for Laboratory Compaction Characteristics of Soil Using Standard Effort
2. D1557: Test Method for Laboratory Compaction Characteristics of Soil Using Modified Effort
3. D2216: Standard Test Method for Laboratory Determination of Water (Moisture) Content of Soil and Rock
4. D2487: Standard Test Method for Classification of Soils for Engineering Purposes

1.05 TESTING SERVICES

A. The testing laboratory shall be selected and approved by the Engineer of Record and shall be responsible for conducting and interpreting tests. The Testing Laboratory shall state in each report whether or not the test specimens conform to all requirements of the Contract Documents and specifically note any deviation therefrom.

1.06 SUBMITTALS

A. Submit the following test reports in accordance with Section 01 33 00:

1. Optimum moisture - maximum density of soils.
2. Field density tests.

PART 2 PRODUCTS

2.01 TERMINOLOGY

A. Foundation: (May not be required) When unstable soil, unyielding solid rock, hard pan or other solid materials are encountered at the bottom of trench, the trench shall be over-excavated to a depth of 6 inches below the bottom of the pipe barrel backfilled with an approved material, and compacted to 83% of solid rock or 98% of fill material used as determined by AASHTO T-85. Compacted material shall be placed uniformly with bell holes to support the pipe. In no case shall solid rock exist within 6 inches of bottom of pipe installed.

1. A foundation in the trench bottom is only required if solid rock, hard pan, unstable soils or other unyielding materials are encountered in the trench

bottom.

B. Bedding: Bedding is required primarily to bring the trench bottom up to grade. A compacted minimum depth of 6 inches or more is generally sufficient to provide a uniform and adequate longitudinal support under the piping and the bottom of the trench, with bell holes to support the file. Compaction of the bedding material shall be the same as (A) above.

C. Hunching: That portion of backfill material from the pipe bedding up to the spring line of the piping (center-line of pipe). The most important factor affecting pipe performance and deflection is the hunching material used and its density. Hunching materials shall be placed, rammed under and compacted in 6 inch lifts to provide adequate side support to the pipe while avoiding both vertical and lateral displacement of the pipe from proper alignment during backfilling.

D. Initial Backfill: That portion of the backfill from the spring line (center line) of piping up to a point 12 inches above the top of pipe. Initial backfill materials shall be placed around and over the piping, compacted in maximum lifts of 3 to 6 inches to protect the piping during final backfill.

E. Final Backfill: That portion of the backfill from the top of initial backfill up to the final finished grade of trench. Selected backfill materials may or may not be required for final backfill, and special machine or natural compaction may or may not be required for the backfill materials.

F. Compaction: The process of increasing the density of a soil or aggregate used to backfill a utility trench, by mechanically forcing the particles of the materials used closer together.

1. Machine compaction of the materials used for a utility trench foundation, bedding, hunching, and the initial backfill shall be mandatory and is vital so the utility conduit shall retain its shape and structural integrity. Refer to the specific section of utility construction herein for the degree of compaction required for the backfill materials used. Generally the compaction shall be 95% of standard proctor density of material used.
2. Compaction of the final backfill in a utility trench shall be achieved by one of two methods:

   a. <u>Special Compaction</u> shall be required of final backfill under all improved surfaces of streets, alleys, roadways, roadway aprons, curbs, sidewalks, driveways to businesses, and driveways to residences. The final backfill shall be a graded aggregate placed in lifts of 8 inches or less, with a sufficient degree of compaction to pass 83% of solid rock as determined by AASHTO-T85, approximately 140 pounds per cubic foot of graded aggregate materials specified. The graded aggregate is commonly referred to as "pug mill" or "pug".

b. Natural Compaction shall be required of final backfill under open fields, lawns, unimproved right of ways or natural grounds which are free of traffic. Attained by the loose placing of the backfill material into the trench from the initial compacted backfill up to the final grade. Then, rolling the surface layer of backfill with the wheels or tracks of the placement equipment, mounding the surface, filling, and maintaining all sunken trenches until final acceptance of the work.

Appropriate Guide for Estimated Range of Degree of Compaction Versus Embedment Class and Method of Placement as Percent of Standard Proctor Density or Relative Density* For Granular Materials in Parenthesis**				
Class Embedment	I	II	III	IV
Material Description	Mfg. Granular materials	Sand and gravel soils - clean	Mixed - grain soils	Fine grain soils
Optimum moisture content range limit of % of dry weight	5 - 7	9 - 12	9 - 18	6-30
Soil Consolidation Method	% of Proctor (or Relative) Density Range			
Compact by power tamper or rammer	95 - 100 (75 - 100)	95 - 100 (80 - 100)	95 - 100	90 - 100
Density by portable vibrators	80 - 95 (60 - 75)	80 - 95 (60 - 80)	80 - 95	75 - 90
Consolidate by saturation	80 - 95 (60 - 75)	80 - 95 (60 - 80)		
Hand placing	60 - 80 (40 - 60)			
Hand tamping		60 - 80 (50 - 60)	60 - 80	60 - 75
Dumping	60 - 80 (40 - 60)	60 - 80 (50 - 60)	60 - 80	60 - 75

* Relative density is noted in parenthesis.
** This table serves as an approximate guide defining average Proctor densities attained through various methods of soil consolidation in different classes of soil. The table is intended to provide guidance and is not recommended for design use. Actual design values should be developed by the Engineer of Record for specific soils at specific moisture contents.

Maximum Height of Cover

Pipe Zone Condition			Maximum Height of Cover in ft.
Embedment Class	% of Proctor Density Range	Modulus of Soil Reaction	
I	-	3000	50
II	85 - 95 75 - 85 65 - 75	2000 1000 200	50 50 17
III	85 - 95 75 - 85 65 - 75	1000 400 100	50 28 12
IV	85 - 95 75 - 85 65 - 75	400 200 50	28 17 9
V	*Soil Class Not Recommended*		

Notes: 1. Percent of Proctor density in accordance with AASHTO T-99 or ASTM698.
2. Table is applicable only when minimum Pipe stiffness is 46 lb - in - in.
3. At recommended maximum heights of cover defined, deflections shall not exceed 5% when proper installation procedures are used.

G. Minimum cover for load application:

1. At least 30 inches of cover over the top of the pipe shall be provided before the trench is wheel loaded.
2. At least 36 inches of cover over the top of the pipe shall be provided before using a mobile trench compactor of the hydro hammer or impactor type is used.

2.02 GRAVITY SANITARY SEWER

A. Foundation: Mineral aggregate, equal to Tennessee Department of Transportation Grading "D" Class A, Section 903.05 - Aggregate for Mineral Aggregate Base and Surface Courses. Commonly called "pug mill" or "pug" with 100 % passing a 1-1/2” inch sieve, 85-100% passing a 1” sieve, 60-95 % passing a ¾” sieve, 50-80% passing a 3/8” sieve, and 9-18 % passing a No. 100 sieve with a moisture content of 5 to 6 % by weight.

B. Bedding (Same as Foundation).

C. Hunching (Same as Foundation).

D. Initial Backfill (Same as Foundation).

E. Final Backfill (Where Special Compaction is required - same as Foundation).

F. Final Backfill (Where natural compaction is required)

1. Class I Materials: Aggregate, angular, 1/4" to 1-1/2" graded stone including fill materials which have regional significance such as crushed stone or "pug mill".
2. Class II Material: Course sand and gravel with a maximum particle dimension of 1-1/2 inches including variously graded sand and gravel containing small percentages of fines, generally granular and non-cohesive, either wet or dry. Soil type GW, GP, SM, and SC.
3. Class III Material: Fine sand and clayey gravel, including fine sand, sand-clay mixtures, and gravel-clay mixtures. Soil type GM, GC, SM, and SC.
4. Class IV Material: Silt, silty clays, and clays, including inorganic clays and silts of medium to high plasticity and liquid limits. Soil types MH, ML, CH, and CL.
5. Class V Material: Soil class not recommended.

Description of Embedment Material Classifications		
Soil Class	**Soil Type**	**Description of Material Classification**
Class I *	-	Manufactured angular, granular material. 1/4 to 1 ½ inches (6 to 40 mm) size, including materials having regional significance such as crushed stone or rock, broken coral, crushed slag, cinders, or crushed shells.
Class II **	GW	Well-graded gravels and gravel-sand mixtures, little or no fines. 50% or more retained No. 4 sieve. More than 95% retained on No. 200 sieve. Clean.
	GP	Poorly graded gravels and gravel-sand mixtures, little or no fines. 50% or more retained on No. 4 sieve. More than 95% retained on No. 200 sieve. Clean
	SW	Well-graded sands and gravelly sands, little or no fines. More than 50% passes No. 4 sieve. More than 95% retained on No. 200 sieve. Clean
	SP	Poorly graded sands and gravelly sands, little or no fines. More than 50% passes No. 4 sieve. More than 95% retained on No. 200 sieve. Clean.
Class III ***	GM	Silty gravels, gravel-sand-silt mixtures. 50% or more retained on No. 4 sieve. More than 50% retained on No. 200 sieve.
	GC	Clayey gravels, gravel-sand-clay mixtures. 50% or more retained on No. 4 sieve. More than 50% retained on No. 200 sieve.
	SM	Silty sands, sand-silt mixtures. More than 50% passes No. 4 sieve. More than 50% retained on No. 200 sieve.
	SC	Clayey sands, sandy-clay mixtures. More than 50% passes No. 4 sieve. More than 50% retained on No. 200 sieve.
Class IV	ML	Inorganic silts, very fine sands, rock flour, silty and clayey fine sands. Liquid limit 50% or less. 50% or more passes No. 200 sieve.
	CL	Inorganic clays of low to medium plasticity, gravelly clays, sandy clays, silty clays, lean clays. Liquid limit 50% or less. 50% or more passes No. 200 sieve.
	MH	Inorganic silts, micaceous or diatomaceous fine sands or silts, elastic silts. Liquid limit greater than 50%. 50% or more passes No. 200 sieve.
	CH	Inorganic clays or high plasticity, fat clays. Liquid limit greater than 50%. 50% or more passes No. 200 sieve.
Class V	OL	Organic silts and organic silty clays of low plasticity. Liquid limit 50% or less. 50% or more passes No. 200 sieve.
	OH	Organic clays of medium to high plasticity. Liquid limit greater than 50%. 50% or more passes No. 200 sieve.
	PT	Peat, muck or other highly organic soils.

* Soils defined as Class I materials are not defined in ASTM D2487.
** In accordance with ASTM D2487, less than 5% pass No. 200 Sieve.
*** In accordance with ASTM D2487, more than 12% pass No. 200 sieve. Soils with 5% to 12% pass No. 200 sieve fall in borderline classification, *e.g.,* GP-GC.

2.03 WATER MAIN - NORMAL COMPACTION

A. Foundation: Mineral aggregate, equal to Tennessee Department of Transportation Grading "D" Class A, Section 903.05 - Aggregate for Mineral Aggregate Base and Surface Courses. Commonly called "pug mill" or "pug" with 100 % passing a 1-1/2" sieve, 85-100 % passing a 1" sieve, 60-95 % passing a ¾" sieve, 50-80% passing a 3/8" sieve, and 9-18 % passing a No. 100 sieve with a moisture content of 5 to 6 % by weight.

B. Bedding

1. Class I Material: Aggregate, angular, 1/4" to 1-1/2" graded stone including fill materials which have regional significance such as crushed stone.
2. Class II Material: Course sand and gravel with a maximum particle dimension of 1-1/2 inches including variously graded sand and gravel containing small percentages of fine, generally granular and non-cohesive, with wet or dry. Soil Type GW, GP, SW, and SP.
3. Class III Material: Fine sand and clayey gravel, including fine sand, sand-clay mixtures, and gravel-clay mixtures. Soil Type GM, GC, SM, and SC.
4. Class IV Materials: Silt, Silty Clays, and clays, including inorganic clays and silts of medium to high plasticity and liquid limits. Soil Types MH, ML, CH, and CL.
5. Class V Material: Soil class not recommended.

C. Hunching (Same as Bedding)

D. Initial Backfill (Same as Bedding)

E. Final Backfill (Same as Bedding)

2.04 WATER MAIN - SPECIAL COMPACTION

A. Foundation, Bedding, Hunching, Initial Backfill, and Final Backfill:

1. Mineral aggregate, equal to Tennessee Department of Transportation Grading "D" Class A, Section 903.05 - Aggregate for Mineral Aggregate Base and Surface Courses. Commonly called "pug mill" or "pug" with 100 % passing a 1-1/2" sieve, 85-100% passing a 1" sieve, 60-95% passing a ¾" sieve, 50-80% passing a 3/8" sieve, 40-65% passing a No. 4 sieve, 20-40% passing a No. 16 sieve, and 9-18 % passing a No. 100 sieve. With a moisture content of 5 to 6% by weight.

2.05 STORM WATER - REINFORCED CONCRETE

A. Concrete circular pipe, horizontal elliptical pipe, vertical elliptical pipe, arch pipe, and pre-cast concrete box sections are to be installed as recommended by the American Concrete Pipe Association's Four Bedding Classes for the trench or embankment conditions encountered as follows:

1. Class A Bedding for Improved Areas: A concrete cradle bedding is used only with circular pipe. The pipe is bedded in non-reinforced or reinforced concrete extending up the sides for a height equal to one-fourth the outside diameter. The cradle should have a minimum width at least equal to the outside diameter of the pipe plus 8 inches. The backfill above the cradle is densely compacted and extends 12 inches above the crown of the pipe. In rock, especially where blasting is likely in the adjacent vicinity, the concrete cradle should be cushioned from the shock of the blasting which can be transmitted through the rock.

   a. The concrete arch is an alternate to the concrete cradle for trench installations. The pipe is bedded in carefully compacted granular material extending halfway up the sides of the pipe. The top half of the pipe is covered with non-reinforced or reinforced concrete having a minimum thickness over the top of the pipe of one-fourth the inside pipe diameter. The arch should have a minimum width at least equal to the outside diameter of the pipe plus 8 inches.

2. Class B Bedding for Improved Areas: For a shaped subgrade with granular foundation the bottom of the excavation is shaped to conform to the pipe surface but at least 2 inches greater than the outside dimensions of the pipe. The width should be sufficient to allow 60% of the outside pipe diameter for circular pipe and 70% of the outside span for arch and elliptical pipe to be bedded in fine granular fill placed in the shaped excavation. Densely compacted backfill should be placed at the sides of the pipe to a depth of at least 12 inches above the top of the pipe.

   a. A granular foundation without shaping is used only with circular pipe. The pipe is bedded in compacted granular material placed on the flat trench bottom. The granular bedding has a minimum thickness of 6 inches extended at least halfway up the pipe at the sides. The remainder of the side fills, to a minimum depth of 12 inches over the top of the pipe, shall be filled with densely compacted material.

3. Class C Bedding for Unimproved Areas: Class C Bedding is recommended in unimproved areas only with a shaped subgrade the pipe is bedded with ordinary care in a soil foundation, shaped to fit the lower part of the pipe exterior with reasonable closeness for a width of at least 50% of the outside diameter for a circular pipe, and 10% of the outside diameter for a circular

pipe and box sections. For trench installations the sides and area over the pipe are filled with lightly compacted backfill to a minimum depth of 6 inches above the top of the pipe. For embankment installations the pipe should not project more than 90 % of the vertical height of the pipe above the bedding.

a. A granular foundation is used only with a circular pipe, and consist of a compacted granular material or densely compacted backfill placed on a flat bottom trench. The bedding material should have the minimum thickness of 6 inches, and extend up the sides for a height of at least 1/6 the outside diameter of the pipe.

4. Class D Bedding: Class D bedding is not recommended for improved or unimproved areas.

B. Concrete Cradle: Continuous concrete cradle constructed of Class "B" concrete as specified in Section 03 30 00.

C. Concrete Arch: Continuous concrete arch constructed of Class "B" concrete as specified in Section 03 30 00.

D. Foundation, Bedding, Hunching, Initial Backfill, and Final Backfill:

1. Mineral aggregate, equal to Tennessee Department of Transportation Grading "D" Class A, Section 903.05 - Aggregate for Mineral Aggregate Base and Surface Courses. Commonly called "pug mill" or "pug" with 100% passing a 1-1/2" sieve, 85-100% passing a 1" sieve, 60-95% passing a 3/4" sieve, 50-80% passing a 3/8" sieve, 40-65 % passing a No. 4 sieve, 20-40 % passing a No. 16 sieve, and 9-18% passing a No. 100 sieve, with a moisture content of 5 to 6 % by weight.

2.06 STORM WATER - CORRUGATED METAL PIPE - FOR UNIMPROVED AREAS ONLY

A. Foundation: Mineral aggregate, equal to Tennessee Department of Transportation Grading "D" Class A, Section 903.05 - Aggregate for Mineral Aggregate Base and Surface Courses. Commonly called "pug mill" or "pug" with 100% passing a 1-1/2" sieve, 85-100% passing a 1" sieve, 60-95% passing a 3/4 sieve, 50-80% passing a 3/8" sieve, 40-65% passing a No. 4 sieve, 20-40 % passing a No. 16 inch sieve, and 9-18% passing a No. 100 sieve. With a moisture content of 5 to 6 % by weight.

B. Bedding:

1. Class I Material: Aggregate, angular, 1/4" to 1/2" inch graded stone including fill materials which have regional significance such as crushed stone.
2. Class II Material: Course sand and gravel with a maximum particle dimension of 1-1/2 inches including variously graded sand and gravel

containing small percentages of fines, generally granular and non-cohesive, either wet or dry. Soil Type GW, GP, SW, and SP.

3. Class III Material: Fine sand and clayey gravel, including fine sand, sand-clay mixtures, and gravel-clay mixtures. Soil Type GM, GC, SM, and SC.
4. Class IV Material: Silt, silty clays, and clays, including inorganic clays and silts of medium to high plasticity and liquid limits. Soil Types MH, Ml, CH, and CL.
5. Class V Material: Soil Class not recommended.

C. Hunching (Same as Bedding)

D. Initial Backfill (Same as Bedding)

E. Final Backfill (Same as Bedding)

PART 3 EXECUTION

3.01 PREPARATION

A. Prior to trench excavations within a public right-of way, a traffic control plan shall be furnished to, and approved by, the City Engineer or his agent.

B. Prior to the trench excavation, all barriers, personnel, safety devices, and public safety devices shall be in place and approved by the City Engineer or his agent.

C. Contractor shall furnish, install, and maintain all barriers, safety devices, traffic control personnel and any other safety device as required by local, state, or federal regulatory authority.

D. All safety and traffic control devices or barriers shall be installed according to the manual on Uniform Traffic Control Devices, and OSHA of Tennessee.

E. Protect and maintain all existing survey bench marks, monuments, and survey points. Surveying points shall be replaced by the contractor, if removed in association with the trench excavation.

F. Prior to any excavation, all soil and erosion control/abatement devices shall be in place and approved in writing by the City Engineer or his agent.

G. Dewatering of trenches and excavation shall be pumped to silt pit and/or an erosion control abatement device designed for the purpose.

H. Trench spoil shall be placed upon and within the easement and/or the temporary construction easements only. Any excess spoil placed outside a legal easement shall be the responsibility of the contractor.

I. No excavated trenches shall be left open or uncovered overnight.

J. No street, alley or legal right of way shall be closed. One lane of traffic shall be maintained for emergency and local access at contractors expense and at all times, day or night, unless otherwise directed by the City Engineer or his agent.

K. One-half of the traveled portion of a legal street or alley shall just remain open to traffic at all times, unless otherwise directed by the City Engineer or his agent.

L. If permanent pavement repairs cannot be made within two days, a temporary replacement shall be made with a minimum 2 inches of cold mix or hot bituminous seal coat over compacted crushed stone, until a permanent repair can be made.

M. Existing pavement, concrete or asphalt, bases, curbs and gutters, driveways, and sidewalks shall be mechanically saw cut to a neat construction line.

N. Dust control is mandatory. A dust control plan shall be submitted to the City Engineer or his agent and approved in writing prior to any excavation within a public street or right-of-way.

3.02 EXCAVATION TRENCHES

A. Excavate and or open only the length of trench and or areas needed for the length of piping and or equipment to be installed in a single work day. At no time shall a trench excavation or excavation for equipment be left open overnight.

B. Perform in such a manner as to form a suitable trench in which to place the pipe and so as to cause the least inconvenience to the public.

C. Maximum width or trench at the crown of the pipe shall be 2 feet plus the nominal diameter of the pipe.

D. Cut pavement with mechanical saws along neat, straight construction lines.

E. Trench depth: for water lines and sanitary sewage force main - sufficient to provide minimum cover of 30 inches over the top of the pipe; for gravity sewer lines and storm water piping - as shown on the Plans or as specified.

F. Align trench as shown on the Plans unless a change is necessary to miss an unforeseen obstruction. At no time shall an alignment be rerouted outside the public right of way or outside an established private utility easement without the expressed consent of the City Engineer or his agent.

G. For water pipe and forced sewer main, shape the bottom of the trench to provide uniform bearing of the pipe throughout its entire length. Dig bell holes to aid in securing uniform support of the pipe see foundation.

H. For sewer and storm water pipe, fill the bottom of the trench with granular material as specified herein, see Bedding.

I. When unstable soil is encountered at the trench bottom, a foundation shall be required by removing the unstable soil as required to assure support of the pipeline and backfill to the proper grade with approved aggregate or AASHTO M-43, Size No. 2 or 3, see Foundation.

J. When unyielding solid rock, hard pan or other solid material are encountered remove the unyielding material encountered in the trench excavation to a depth of 6 inches below the bottom of the pipe barrel, backfill with an approved material, and compact to relative compaction of 83% of solid rock or 98% of fill material used as determined by AASHTO T-85 to uniformly support the pipe. In no case shall solid rock exist within 6 inches of the finished pipeline, see Bedding if rock is encountered.

K. When rock borings or soundings are provided, they are for information only and do not guarantee existing conditions. Make such investigations as deemed necessary to determine existing conditions.

3.03 SHEETING, SHORING, BRACING, AND SAFETY DEVICES

A. Subpart "P" Trenching and Excavation Standards 1926.650 and Appendix A-F of the Occupational Safety and Health Acts (OSHA) is made a part of this standard and section.

B. Furnish, install, inspect, and maintain all sheeting, bracing, safety equipment, etc., as may be required by the above OSHA Standard, to support the sides of any and all excavation and to prevent movement.

C. When necessary or when directed by the City Engineer or his agent, furnish, put in place, and maintain such sheeting, bracing, etc., as may be required to support the side of the excavation and to prevent movement.

D. Take care to prevent voids outside the sheeting.

E. If voids are formed, immediately fill and ram to the satisfaction of the City Engineer or his agent.

F. Devise plans for performing this work subject to the approval of the City Engineer or his agent.

G. If adjacent facilities could be damaged, remove all sheeting, shoring and bracing after backfill has been placed to a depth of 18 inches over the pipeline.

H. Cut shoring off at the top of the pipe and leave the lower section in the trench.

3.04 USE OF EXPLOSIVES

A. The Contractor shall conduct a pre-blast survey of the surrounding structures within a minimum of 300 feet of any blasting operation and document condition before any blasting begins. The documentation shall include written descriptions, photographs of the structures, and measures of obvious signs of structural distress such as cracks.

1. These are minimum acceptable limits and bidding contractors may exceed these limits for his own liability.

B. Conduct all blasting operations in accordance with prevailing municipal, state or other agency regulations, codes, ordinances, or laws.

C. Exercise due caution when blasting adjacent to existing structures and pipelines.

D. If structures or pipelines are damaged, promptly replace or repair them at no expense to the City. Failure to comply with this requirement shall constitute grounds for withholding contract payments until compliance is made.

E. Do not conduct blasting operations within 25 feet of water, sewer, gas, or other utility lines, unless otherwise directed by the City Engineer or his agent.

F. Cover all shots with blasting mats to prevent flying material.

G. Tennessee Blasting Standards Act Section 68.44.101, or its latest revision is made a part of this standard.

3.05 DISPOSAL OF EXCAVATED MATERIAL

A. Satisfactorily dispose of all excess excavated material which cannot be used for or is not suitable for embankments or backfill. At the contractors option, excess excavated material shall be hauled to the City's landfill off Brookside Drive, north of East Stone Drive, unless otherwise directed by the City Engineer or his agent. No separate payment shall be made under this contract for the disposal of waste materials in the City's Landfill, or other areas, nor shall a separate payment be made under this contract for a tipping fee. All costs incidental thereto shall be included in the contract price for associated work.

3.06 UNAUTHORIZED EXCAVATION

A. All excavation outside or below the proposed lines and grades shown on the Plans or directed by the City Engineer or his agent.

B. Backfill areas of unauthorized excavation with the type material necessary (earth, rock, or concrete) to insure the stability of the structure of construction involved.

C. Unauthorized excavation or backfill to replace same shall not be a pay item.

3.07 REMOVAL OF WATER

A. Keep excavated areas free of water while work is in progress. Dewatering of trenches and excavation shall be to a silt pit or an erosion controlled area. (See Soil and Erosion Control).

B. Well-pointing shall be performed if required.

C. Take particular precautions to prevent the displacement of structures or pipelines as a result of accumulated water and or the lowering of surrounding water table.

3.08 OBSTRUCTIONS

A. Obstructions shown on the Plans are for information only and do not guarantee their exact locations nor that other obstructions are not present.

B. When utilities or obstructions are not shown on the Plans but are present off the roadway at the location of the proposed pipeline route, the Contractor may request to relocate the pipeline in the roadway if necessary to avoid disturbing the utility or obstructions.

C. If the relocation is approved, the Contractor shall receive compensation for additional granular backfill and pavement replacement as measured and paid for under appropriate contract pay items as determined by the City Engineer or his agent.

D. Exercise due care in excavating adjacent to existing obstructions and do not disturb same unless absolutely necessary.

E. In the event obstructions are disturbed, repair or replace as quickly as possible to the condition existing prior to their disturbance. This repair or replacement shall not be a pay item.

F. If required by the utility company, pay for the repair or replacement work performed by the forces of the utility company or other appropriate party at no cost to the City.

G. If replacement or repair of disturbed obstructions is not performed after a reasonable period of time, the City Engineer or his agent may have the necessary work done and deduct the cost of same from payments to the Contractor.

3.09 PIPE OR STRUCTURES TO BE ABANDONED OR REMOVED

A. Pipe indicated on the plans to be abandoned shall be plugged, capped or sealed with concrete, as specified herein.

B. Pipe indicated on the plans to be removed shall be completely removed then backfilled with approved material and thoroughly compacted, in accordance with related backfill work specified elsewhere. Removed pipe not required in the completion of the work shall be taken from the site and disposed of by the Contractor.

C. Structures indicated on the plans to be abandoned shall be cut off or removed to a minimum depth of 24 inches below finished grade then backfilled with approved material and thoroughly compacted, in accordance with related backfill work specified elsewhere. Existing frames and covers shall be returned to the Owner.

D. Structures indicated on the plans to be removed shall be demolished and completely removed then backfilled with approved material and thoroughly compacted, in accordance with related backfill work specified elsewhere. Existing frames and covers shall be returned to the Owner.

3.10 STORM SEWER BEDDING

A. Use Class A or B bedding for improved areas and Class C bedding in unimproved areas, whichever is shown on the Plans. If not shown, use Class B bedding.

B. Construct Class B bedding in a trench cut in natural ground or compacted embankment.

1. Bed pipe on 6 inches of graded aggregate material and sufficient additional B material accurately shaped by a template to fit the lower part of the pipe exterior.
2. Compact in layers not over 6 inches, in loose thickness, around the pipe to a minimum depth of 12 inches over the crown of the pipe.
3. When bell and spigot pipe is to be placed, dig recesses in the bedding material of sufficient width and depth to accommodate the bell.

C. Construct Class C bedding in a shallow trench.

1. Shape the bedding to fit the lower pipe exterior for the specified embedment.
2. When bell and spigot pipe is to be placed, dig recesses of sufficient width and depth to accommodate the bell.

3.11 GRAVITY SANITARY SEWER BEDDING

A. Always maintain proper grade and alignment during the bedding and compaction process.

1. Any pipe dislodged during this process shall be replaced by the Contractor at his expense.
2. Dig bell holes to assure uniform support of the pipe.

B. Bedding for PVC Sewers:

1. Completely encapsulate each sewer pipe section with minimum of 6 inches of compacted graded aggregate material on both sides, the bottom of the pipe, and 12 inches on the top of the pipe.

C. Bedding for Ductile Iron Pipe Sewers:

1. In solid rock excavations, unless otherwise noted on Plans, lay each sewer pipe section on a 6 inches bed of compacted graded aggregate bedding material and backfill with same compacted material to the spring line of the pipe with same.
2. Dig bell holes to assure uniform support throughout the entire length of pipe.

3.12 SANITARY SEWER FORCE MAIN BEDDING

A. In solid rock excavations, lay each sewer pipe section on a 6 inches bed of compacted graded aggregate bedding material and backfill with a compacted specified material to the spring line of the pipe.

B. Otherwise, excavate the trench in such a manner as to form a suitable bed on which to place the pipe, and dig bell holes to assure uniform support throughout the entire length of pipe.

3.13 BEDDING FOR WATER LINES

A. In solid rock excavation, lay each section of pipe on a minimum of 6 inches compacted aggregate foundation abed with bell holes for uniform pipe support.

B. Otherwise, excavate the trench in such a manner as to form a suitable bed on which to place the pipe, and dig bell holes to assure uniform support throughout the entire length of pipe.

3.14 INITIAL BACKFILLING

A. Do not begin backfilling before the City Engineer or his agent has inspected the grade and alignment of the pipe. If backfill material is placed over the pipe before

an inspection is made, reopen the trench in order for an inspection to be made.

B. Place backfilling in compacted 6 inch lifts, until fill has progressed to 12 inches above the top of the pipe.

1. Deposit and compact graded aggregate material in 6 inch lifts (where required elsewhere in these specifications or noted on the Plans) or deposit compacted approved soil free from lumps, clods, frozen material or stones in layers approximately 6 inches thick.
2. Compact backfill in 6 inch lifts as specified herein.
3. Use compactors and machines of a suitable type which do not crush or otherwise damage the pipe.

3.15 FINAL BACKFILLING

A. After the initial backfill has reached a point 12 inches or more above the top of the pipe, perform final backfilling depending upon the location of the work and danger from subsequent settlement.

B. Backfilling in Unimproved Areas: (Natural Compaction)

1. Dispose of and replace all soft or yielding material which is unsuitable for trench backfill with suitable material.
2. Deposit backfill to the surface of the ground by dragline, bulldozer, or other suitable equipment in such a manner so as not to disturb the pipe, and compact by wheel or track loading.
3. Neatly round sufficient surplus excavated material over the trench to compensate for settlement.
4. Dispose of all surplus excavated material.
5. Prior to final acceptance, remove all mounds to the elevation of the surrounding terrain.

C. Backfilling beneath driveways and streets where non-rigid and rigid type surfacing is to be replaced: (Special Compaction)

1. Backfilling methods and materials for shoulders along streets and highways shall be in accordance with the requirements of the specifications herein or the county, or state departments maintaining the particular roadway or highway.
2. Deposit and compact in 12 inch lifts a graded aggregate material to completely fill the excavated trench starting at the top of the initial backfill zone to the finished surface.
3. Replace with similar materials, all existing construction which may be damaged or destroyed as a result of pipe trenching.
4. Where shoulders along state highways have seal coat surfaces, replace with double bituminous seal in accordance with Section 32 12 16, or the requirements of the highway department.

D. Crushed stone for pavement maintenance and shoulder replacement:

1. Where possible, salvage and reuse all base material which is removed during construction.
2. Haul and place additional material as necessary and in conformance with Section 31 22 16, Base and Subgrade treatment.
3. Wet and thoroughly compact crushed stone and blade to match the existing surface prior to final acceptance.

3.16 COMPACTION AND TESTS

A. Backfill shall be moistened or aerated as required to provide the proper moisture content necessary to achieve the compaction specified herein.

B. Compaction by water, either natural or mechanical, shall not be permitted. Each layer shall be thoroughly tamped and compacted by hand or pneumatic tamper in place. Special care shall be taken in using a mechanical tamper directly over the pipe.

C. Compaction:

1. Backfill material shall be placed and compacted to the following minimum percentages of the maximum density as determined by ASTM D698.
2. Fill from the top of the pipe bedding or bottom of the pipe trench to 1 foot above the top of the pipe, each layer shall be compacted 95% (ASTM D698).
3. Fill below unpaved areas from 1 foot above the top of the pipe to the topsoil subgrade and in drainage channels to the topsoil subgrade, each layer shall be compacted 90% (ASTM D698).
4. Fill below paved areas or walks, each layer to the pavement subgrade shall be compacted 95% (ASTM D698).

D. Testing of backfill shall be coordinated by the Engineer of Record with an independent testing laboratory and paid for by the Owner. One field density test per lift, per 500 linear feet, or fraction thereof, of pipe may be performed by the Owner at his expense in the presence of the Engineer of Record to assure compliance with the compaction requirements. If a test indicates that the required density has not been obtained, the backfill in that 500 foot reach of pipe shall be removed, replaced, recompacted and retested at the Contractor's expense unless the Contractor can show by additional testing, at his expense, that the limit of improperly compacted material is confined to a lesser reach. Location of such tests shall be selected by the Engineer of Record.

E. Backfill material shall be tested in accordance with ASTM D698 and D2216. Backfill which fails to meet the minimum percentages specified shall be removed replaced, recompacted, and the area retested all at the expense of the Contractor, to

ensure the correct compaction has been performed.

3.17 RESTORATION

A. The Contractor shall at his own expense, clean up all refuse, rubbish, scrap material, and debris caused by his operations, to the end that at all times the site of the work shall not be a source of litter and shall present a neat, orderly and workmanlike appearance. Immediately following the backfilling of the trench, the Contractor shall "broom" or otherwise clean the surfaces of paved streets. All surplus material shall be removed and disposed of at this time, at the Contractor's expense.

B. Developed property such as walks, steps, mailboxes, fences and the like, disturbed by the work, shall be restored or replaced to their original condition. Ditches shall be restored to their original shape and slope. All disturbed areas not covered by pavement or structures and all areas disturbed by the construction activity shall be fertilized, limed, seeded with the type of seed which produces a stand of grass similar to the existing, and mulched. Any washing or erosion of the surface, and any areas which seed does not germinate, and grass grow, prior to acceptance of the work, shall be repaired by the Contractor, at no additional expense to the Owner.

C. Any property pins or monuments, moved or destroyed by the project work, shall be restored to their correct location by a licensed surveyor.

D. Maintain the surface of any trench or excavation in a traveled right of way or paved surface in such condition as to make it passable and safe for traffic. The backfilled trench shall be maintained to the satisfaction of the Engineer in order that it remains passable and safe for traffic at all times following the backfilling of the trench and prior to the pavement restoration. Pavement restoration shall be in accordance with Section 32 12 16.

E. Restoration of underground utilities shall be in accordance with the Standards of the Utility, with respect to labor, equipment, and materials.

F. Where required, additional concrete steps, low walls and walks shall be provided to provide a smooth, safe transition to private property from new walks, and new curb and gutter.

3.18 MEASUREMENT AND PAYMENT - TRENCHING, BEDDING AND BACKFILLING

A. Pipeline trenching, foundation, bedding, and initial backfilling including hauling, compaction, placing, and under cut bedding shall not be measured for payment, excluding the following items:

1. Solid rock excavations when provided for on the Bid Form
2. Crushed stone for final backfill when shown on the Plans and provided for on

the Bid Form

3. Crushed stone for payment maintenance and shoulder replacement when provided for on the Bid Form

B. Payment for trenching bedding and backfilling as stipulated above, shall be included in the contract unit price for the items with which they are associated.

3.19 MEASUREMENT AND PAYMENT - SOLID ROCK EXCAVATION

A. When payment for solid rock excavation in trench is provided for on the Bid Form, the length of such excavation and its depth from the lower surface of the solid rock formation or 6 inch below the bottom of the pipe barrel, whichever is higher in elevation, up to the upper surface of the sold rock portion of the excavation shall be measured by the City Engineer or his agent at intervals sufficient to approximate the rock profile. For this purpose rock excavation is defined as follows:

1. Excavation of rock which cannot be economically excavated without the use of explosives
2. Any rock, boulder, fragment of rock or concrete having a volume of at least one-half cubic yard or a fragment excavated from a formation having a volume greater than one-half cubic yard
3. Width of solid rock excavation shall not be measured except to confirm compliance to these specifications.

B. If provided for on the Bid Form, solid rock excavation as above stipulated shall be paid for at the contract unit price per cubic yard as determined by the average end area method applied individually to each section of measured solid rock excavation. This volume determination shall be based on an assumed width of excavation, as follows:

1. Excavation for pipe, nominal diameter of pipe plus 2 feet
2. Excavation for manhole, nominal diameter of manhole plus 4 feet
3. When not provided for on the Bid Form, payment for solid rock excavation shall be included in the payment for the items with which it is associated.

3.20 MEASUREMENT AND PAYMENT - CRUSHED STONE FOR PAVEMENT MAINTENANCE AND SHOULDER REPLACEMENT

A. Crushed stone for pavement maintenance and shoulder replacement including hauling, placing, blading and compacting shall be measured by weight tickets for payment by the ton in place.

B. If provided for on the Bid Form, crushed stone for pavement maintenance and shoulder replace as above stipulated shall be paid for at the contract unit price per ton as determined by weight tickets. If not provided for on the Bid Form, payment for crushed stone for pavement maintenance and shoulder replacement shall not be

made directly, but shall be included in the payment for the items with which it is associated.

3.21 MEASUREMENT AND PAYMENT - CRUSHED STONE FOR FINAL BACKFILL

A. Crushed stone for backfill shall not be measured directly except to verify conformance to the Plans and these Specifications.

B. If provided for on the Bid Form, when crushed stone for backfill is shown on the Plans and provided for on the Bid Form payment shall be made at the contract unit price per ton as determined by a volumetric calculation based on a depth of 6 feet or the depth to the top of the pipe bedding, whichever is less, length as shown on the Plans, and a width of 2 feet plus the nominal diameter of the pipe. This volume shall be converted to tons by using a factor of 7 tons per 100 cubic feet. When not shown on the Plans or not provided for on the Bid Form, payment for crushed stone shall be included in the payment for the items with which it is associated.

END OF SECTION

SECTION 31 25 13

SOIL AND EROSION CONTROL

PART 1 GENERAL

1.01 WORK INCLUDED

A. This work shall consist of temporary and or permanent control measurers as shown on the plans or as ordered by the City Engineer or his agent during the life of the contract to control soil erosion and water pollution. Such measures shall include, but are not limited to, the use of silt barriers, fiber mats, netting, mulches, grasses, slope drains, and other control devices. Erosion prevention and sediment control measures as described herein shall be applied to any erodible material exposed by any activity within the project limits.

B. The City Engineer or his agent has the authority to limit the surface area of erodible earth material exposed by clearing and grubbing, the surface of erodible earth material exposed by excavation, borrow and fill operations and to direct the Contractor to provide immediate permanent or temporary pollution control measures to prevent contamination of adjacent streams or other watercourses, lakes, ponds, or other water impoundments. Such work may involve the construction of temporary berms, dikes, sediment basins, slope drains, and use of temporary mulches, mats, seeding, or construction exits or other control devices or methods as necessary to prevent erosion and control sedimentation.

C. In the event of conflict between these requirements and pollution control laws, rules, or regulations of other Federal, State or local agencies, the more restrictive laws, rules or regulations shall apply.

D. The temporary erosion control features installed by the Contractor shall be acceptably maintained by the Contractor until the construction site is stabilized, and he shall remove such installation if ordered by the City Engineer or his agent. Any materials removed shall become the property of the Contractor.

E. In case of repeated failure on the part of the Contractor to control erosion, pollution and siltation, the City Engineer or his agent reserves the right to employ outside assistance or to use his own forces to provide the necessary corrective measures. Such incurred direct costs plus project engineering costs shall be charged to the Contractor and appropriated deductions made from the Contractor's monthly progress estimate.

1.02 RELATED WORK

A. Specified elsewhere:

1. Section 03 30 00: Concrete Work
2. Section 31 11 00: Clearing and Grubbing
3. Section 31 22 00: Grading and Excavating
4. Section 31 22 16: Base and Subgrade Treatment
5. Section 31 23 33: Trenching, Backfilling and Compaction
6. Section 31 25 23: Rip-Rap
7. Section 32 91 19: Topsoil
8. Section 32 92 19: Temporary Seeding
9. Section 32 92 20: Permanent Seeding
10. Section 32 92 23: Sodding
11. Section 33 30 00: Sanitary Sewer Systems
12. Section 33 05 10: Utility Separation and Stream Crossings

1.03 REFERENCES

A. Tennessee Department of Environment and Conservation (TDEC) Erosion Prevention and Sediment Control Handbook of latest issue.

1. Vegetative Practices.
2. Structural Practices.
3. Construction General Permit.

B. City of Kingsport Stormwater Management Manual of latest issue.

1. Stormwater Management Ordinance of latest issue.
2. Structural Best Management Practices (BMPs)
3. Vegetated Buffers

PART 2 PRODUCTS

(NOT APPLICABLE)

PART 3 EXECUTION

3.01 METHOD OF MEASUREMENT

A. In the event that temporary erosion and pollution control measures are required because of the Contractor's negligence, carelessness or failure to install permanent controls as a part of work as scheduled and are ordered by the City Engineer or his agent, such work shall be performed by the Contractor at his own expense. Temporary erosion and pollution control work required, which is not attributed to

the Contractor's negligence, carelessness or failure to install permanent controls, shall be measured and paid for as specified for all acceptable work.

B. Seeding shall not be measured and is to be measured and paid in accordance to standard seeding specification.

C. Sodding - Sod shall be measured by the squared yards sodded in accordance with the Specifications for Sodding.

D. The quality of temporary slope drains to be paid for shall be determined by the linear foot constructed and measured. All cost of material, installation, and removal involved with temporary slope drains shall be considered the unit price for slope drains.

E. Silt barriers shall be measured and paid for by the linear foot.

F. Excavation for and the regular number of sediment structures shall be considered as a necessary part of the unit price for the work they are associated with. When the structure is provided for on the bid form, the unit price for sediment structures shall include excavation, erection, cleaning, repairing, disposition of excavated material, and removal of restoration when no long required.

G. All temporary berms and creek crossings shall be considered as a necessary part of the unit price for road, drainage excavation, and utility construction, and shall not be paid for separately.

H. Riprap shall be measured by the ton in accordance with the specification for riprap.

I. Temporary construction entrances shall be measured by the ton of stone used.

3.02 BASIS OF PAYMENT

A. The accepted quantities of the items listed below shall be paid for at the contract price per unit of measurement for each of the pay items which is listed in the Bid Schedule.

B. Payment shall be made under:

1. Seeding as specified under Specifications for Seeding.
2. Sodding per square yard.
3. Temporary Slope Drains per lineal foot.
4. Riprap - per ton.
5. Temporary construction entrances - per ton.
6. Silt Barriers per lineal foot.
7. Sediment Structures - per unit.

C. The above unit prices shall compensate for completing the work as outlined in the Plans and Specifications including all materials, labor, incidentals, maintenance, removal, and restoration of site.

D. When not provided for on the Bid Form, payment for any soil and erosion control devices or item shall not be made directly, but shall be included in the items with which it is associated.

END OF SECTION

SECTION 31 25 23

RIP-RAP

PART 1 GENERAL

1.01 WORK INCLUDED

A. Preparation of Foundation.

B. Placing of rubble stone, concrete block or sacked sand-cement rip-rap.

1.02 RELATED WORK

A. Specified elsewhere:

1. Section 03 30 00: Concrete Work
2. Section 31 11 00: Clearing and Grubbing
3. Section 31 22 00: Grading and Excavating

PART 2 PRODUCTS

2.01 RIP-RAP

A. Description

1. This work shall consist of furnishing and placing, one or more classes of crushed or fractured limestone on a prepared surface in accordance with these specifications and in reasonably close conformity with the sizes, thicknesses and typical cross-section shown on the Plans or established by the Engineer of Record.

B. Materials

1. All material used in this construction, in addition to the general requirements of these specifications, unless otherwise stipulated, shall conform to the following:

a. Class I: Stones ranging in weight (approx. size) 1 lb (1 1/2" X 1 1/2" X 1 1/2") to 12 lbs. (5" X 5" X 5") with 75% greater than 8 lbs.

b. Class II: Stones ranging in weight (approx. size) 12 lbs (5" X 5" X 5") to 70 lbs (9" X 9" X 9") with 75% greater than 50 lbs.

c. Class III: Stones ranging in weight (approx. size) 70 lbs (9" X 9" X 9") to 165 lbs (1' X 1' X 1') with 75% greater than 135 lbs.

d. Class IV: Stones ranging in weight (approx. size) 165 lbs (1' X 1' X 1') to 550 lbs (1 1/2' X 1 1/2' X 1 1/2') with 75% greater than 300 lbs.

2.02 GROUT

A. Mix 1 part portland cement, 4 parts sand and sufficient water to make grout flow into and fill voids.

B. Fine Aggregate Sand:

1. AASHTO M-45: hard, strong, durable uncoated mineral or rock particles free of injurious amounts of organics or other deleterious substances.
2. Sand for grout: uniformly graded from coarse to fine within the following limits:

Sieve Size	Percent Passing by Weight
8	100
50	15 - 40
100	0 - 10
200	0 - 5

3. Test aggregate, when required, by methods of AASHTO:

Sampling	T-2
Clay lumps	T-112
Coal and lignite	T-113
Material passing 200 sieve	T-11
Organic impurities	T-21
Mortar-making properties	T-71
Sieve analysis	T-27
Soundness (sulfates)	T-104
Soundness (freezing and thawing)	T-103
Light weight particles	T-149

C. Portland Cement:

1. AASHTO M-85 or ASTM C-150.

2. Sample and test Portland Cement, when required, by the methods of AASHTO:

Soundness	T-107
Sampling	T-127
Chemical Analysis	T-105
Fineness:	
Turbidimeter	T-98
Air permeability	T-153
Time of Setting:	
Gillmore needles	T-154
Vicat needles	T-131
Air Content of Mortar	T-137
Normal Consistency	T-129
Tensile Strength	T-132
Compressive Strength	T-106
False Set	T-186
Light weight particles	T-149

2.04 SACKED SAND-CEMENT

A. One bag (94 pounds) of Portland cement and five cubic feet of sand.

B. Sacks shall be made of either cotton or jute, standard grade, and of approximately one cubic foot capacity.

2.05 CONCRETE BLOCKS

A. Class A or Class B concrete as specified in Section 03 30 00.

B. The concrete blocks shall be approximately 8" wide, 12" long, and 12" deep, or may be standard grade 16" concrete building blocks.

PART 3 EXECUTION

3.01 PREPARATION OF FOUNDATION

A. Immediately prior to the construction of rip-rap, the sand filter bed, filter fabric surface or natural ground surface shall be trimmed within reasonably close conformity to the lines and grades, indicated on the plans or as directed by the Engineer of Record. The natural ground or sand filter bed shall be thoroughly compacted by the use of the hand or mechanical tamps. On slopes the bottom of the rip-rap shall be placed at least 2 feet below the material ground surface, unless otherwise directed.

3.02 RIP-RAP

A. Rip rap shall be constructed upon the prepared foundation by hand placing, so that the stones shall be as close together as is practicable in order to reduce the voids to a minimum.

B. When rip rap is constructed in more than one layer, it shall be placed so that it is thoroughly tied together with the large stone protruding from one layer into the other.

C. The standard depth of rip rap shall be 12 inches for Class I and Class II, 18 inches for Class III, and 24 inches for Class IV, unless otherwise directed; and in no instance shall be less than 10 inches in depth.

D. The main stone shall be thoroughly "Chinked" or filled with the smaller stones by throwing them over the surface in any manner which is practical to fill the voids. Knapping the stones shall not be required, except stones protruding more than r inches above what is considered normal surface of the stones.

3.03 GROUTED RIP-RAP

A. Hand place rip-rap upon a prepared foundation as described in section 3.01 so that the stone is as close together as is practicable to reduce voids.

B. Place the stone in such a manner as to stagger all joints as far as it is possible, and then fill voids with grout.

3.04 CONCRETE BLOCK RIP-RAP

A. Place each block against the adjoining blocks with sides and ends in contact.

B. Place the blocks in a manner such that the joints are staggered.

3.05 SACKED SAND-CEMENT RIP-RAP

A. Fill sacks, approximately 3/4 full with a mixture of sand and cement.

B. Place sacks as close together as possible to reduce voids.

3.06 MEASUREMENT AND PAYMENT RIP-RAP

A. Measurement for payment of rip-rap installed and approved including grout, if required, shall be by the ton of each classification on the Bid Form, complete in place. No measurement for payment shall be made for excavation or for preparing the foundation for rip-rap.

B. When provided for on the Bid Form, payment for rip-rap as stipulated above shall be by the Contract unit price for each classification:

1. Rip-Rap (Plain or Grouted): Ton

a. When not provided for on the Bid Form, payment shall not be made directly for rip-rap, but shall be included in the payment for the items with which it is associated.

3.07 MEASUREMENT AND PAYMENT CONCRETE BLOCK RIP-RAP

A. Measurement for payment of concrete block rip-rap installed and approved including grout, if required, shall be by the square yard of each classification on the Bid Form, complete in place.

B. When provided for on the Bid Form, payment for rip-rap as stipulated above shall be by the Contract unit price for each classification:

1. Concrete Block Rip-Rap: Square yard

a. When not provided for on the Bid Form, payment shall not be made directly for rip-rap, but shall be included in the payment for the items with which it is associated.

3.08 MEASUREMENT AND PAYMENT SACKED SAND - CEMENT RIP RAP

A. Measurement for payment of sacked sand-cement rip-rap installed and approved including grout, if required, shall be by the square yard of each classification on the Bid Form, complete in place.

B. When provided for on the Bid Form, payment for rip-rap as stipulated above shall be by the Contract unit price for each classification:

1. Sacked Sand-Cement Rip-Rap: Square yard

a. When not provided for on the Bid Form, payment shall not be made directly for rip-rap, but shall be included in the payment for the items with which it is associated.

END OF SECTION

SECTION 31 74 24

TUNNEL - STEEL LINER PLATE

PART 1 GENERAL

1.01 WORK INCLUDED

A. The work required under this Section shall consist of the complete construction of a tunnel for the purpose of installing sanitary sewer lines or water lines, using tunnel steel liner plates, to the line, grade and dimensions as shown on the drawings.

B. It shall be the responsibility of the Contractor to fully determine the specific site constraints and conditions which affect the work and to determine the appropriate materials, methods, and procedures necessary for the complete installation of the proposed tunnel. Notice is given to the Contractor that all tunneling operations must be approved by the Tennessee Department of Transportation prior to commencing tunneling activities.

C. The Contractor shall submit the proposed tunnel liner system, together with full documentation of the engineering design, for review by the City Engineer or his agent before construction.

PART 2 PRODUCTS

2.01 LINER PLATES

A. Liner Plates shall be Manufactured from steel conforming to ASTM A569. Plates shall be accurately curved to suit the tunnel cross section and shall be of uniform fabrication to allow plates of similar curvature to be interchanged.

B. All plates shall be formed to provide circumferential flanged joints. Longitudinal joints may be flanged or offset lap seam type. All plates shall be punched for bolting on both longitudinal and circumferential seams or joints. Bolt spacing in circumferential flanges shall be in accordance with the manufacturer's standard spacing and shall be a multiple of the plate length so that the plates having the same curvature shall be interchangeable and will permit staggering of the longitudinal seams.

1. Bolt spacing at flanged longitudinal seams shall be in accordance with the manufacturer's standard spacing. For lapped longitudinal seams, bolt size and spacing shall be in accordance with the manufacturers spacing.

C. Grout nipples shall be 2 inch minimum diameter tapped couplings welded into place over holes cut in the liner plate. Tapped holes shall be provided with a pipe plug screwed in place. Grout shall consist of 1 part Portland cement, 2 parts masonry lime, 4 parts mortar sand, 2% of an approved admixture, i.e. Bentonite, Septamine

Stearex, or Hydrocide Liquid, and where required, a retardant.

1. The quantity of mixing water used shall be that which produces a workable mixture of grout capable of being pumped into the voids created by the tunneling.
2. Brick, mortar, and concrete for sealing ends of tunnel shall be the same as specified for manhole construction.

D. Tunnels constructed of structural steel tunnel liner plates shall be circular in section and shall be of the diameter as shown on the Drawings. Thickness of the metal for tunnel liner plates shall be not less than 12 gauge for two-flange plates or 8 gauge for four-flange plates. After fabrication steel tunnel liner plates shall be hot dipped galvanized and, before delivery to job site, shall be fully bituminous coated for a minimum dry film, thickness of 50 mils.

E. Bolts shall conform to ASTM A 307 Grade A, as amended to date, and shall be hot-dip galvanized in accordance with ASTM A 153, as amended to date.

PART 3 EXECUTION

3.01 INSTALLATION

A. Construct the tunnel by the appropriate tunnel method accepted by the City Engineer or his agent. Completely line the tunnel with structural steel liner plates meeting all requirements specified herein.

B. The tunneling operation is to commence from a pit which is a minimum of 12 feet long and 4 feet wider than the diameter of the tunnel, bottom to grade, and sheeted and shored, if necessary. Furnish line and grade stakes.

C. All excavation for the entire length of the tunnel shall be done by tunneling, proceeding from the outlet or downstream end of the conduit. Trim the periphery of the tunnel smooth to fit the outside of the steel liner plate as nearly as is practical.

D. Install the steel liner plates immediately after the excavated material has been removed. Do not remove material more than 24 inches ahead of the installed liner plates.

E. Provide all necessary bracing, bulkheads, and/or shields to ensure complete safety to all traffic at all times during the progress of the work, and perform the work in such a manner as to not interfere with normal traffic over the work.

F. All liner plates for the full length of a specified tunnel shall be of one type only and shall be assembled in accordance with the manufacturer's instructions. Longitudinal seams shall be staggered between rings.

G. Any plates which are damaged during handling or placing, shall be replaced by the Contractor at his expense, except that small areas with minor damage may be prepared by the Contractor as directed by the City Engineer or his agent.

H. At the end of each day's construction, the excavated tunnel wall shall be fully and properly lined with liner plates and all voids occurring between the liner plate and the tunnel wall shall be force-grouted. The grout shall be forced through the grouting holes in the plates with such pressure that all voids are completely filled. Grout material and method of grouting shall be approved by the City Engineer or his agent.

3.02 MEASUREMENT AND PAYMENT - TUNNELS

A. Tunnel in earth: When provided for on the bid form, payment for tunnels as specified in earth shall be paid for at the unit cost per foot, per specified diameter. When not provided for on the bid form, payment for tunneling shall not be made directly, but shall be included in the payment for the item with which it is associated.

B. Tunnel in rock: When provided for on the bid form, payment for tunnels as specified in rock shall be paid for at the unit cost per foot, per specified diameter. When not provided for on the bid form, payment for tunneling shall not be made directly, but shall be included in the payment for the item with which it is associated.

END OF SECTION

SECTION 32 12 16

ASPHALTIC CONCRETE PAVING

PART 1 GENERAL

1.01 WORK INCLUDED

A. Mixing, spreading, compacting and finishing of bituminous pavements for base, leveling and surface courses on roads, parking lots, and other areas.

1.02 RELATED WORK

A. Specified elsewhere:

1. Section 31 11 00: Clearing and Grubbing
2. Section 31 22 00: Grading and Excavating
3. Section 31 22 16: Base and Subgrade Treatment
4. Section 32 17 23: Pavement Marking

PART 2 PRODUCTS

2.01 GENERAL REQUIREMENTS FOR ALL MIXES

A. Mineral aggregate shall meet the general requirements of Section 31 22 16 and additional requirements specified for each type paving mixture.

B. Furnish test reports for aggregate and bituminous materials to be approved for quality by the City Engineer or his agent prior to incorporation into the mix.

C. The City Engineer or his agent may require samples of aggregate, bituminous material, or the plant mixed material for testing by an independent laboratory.

D. All methods of sampling and testing shall be in accordance with current AASHTO methods for use on highway materials.

E. Submit a job-mix formula for approval by the City Engineer or his agent, for each mix to be used on the project to establish:

1. Percentage of each size aggregate to be used in the mix.
2. Percentage of bituminous material.
3. Discharge temperature of the mix.

F. The job-mix formula, shall be within the range established for each type mix with allowable tolerances as follows:

Aggregate passing a 3/8 inch sieve and larger	± 7%
Aggregate passing No. 4 sieve	± 5%
Aggregate passing No. 8 to No. 5 sieves	± 4%
Aggregate passing No. 100 to No. 200 sieves	± 2%
Bitumen	± 0.4%
Temperature of mix	± 20 deg. F.

G. Submit a new job-mix formula if a change in materials is made or if an unsatisfactory mixture results.

H. Bituminous mixing plants, either batch or continuous, sufficiently equipped and coordinated to provide paving mixes in an amount necessary for orderly prosecution of the work and to:

1. Produce a uniform mixture having complete and uniform coating of all aggregate and a uniform distribution of the bituminous material in the mix.
2. Accurately proportion each size aggregate and bituminous material required by the job-mix formula.

I. Haul mix in trucks equipped with:

1. Clean, tight, smooth metal beds which have been coated to prevent the material from adhering to the beds.
2. A canvas cover, or cover of suitable material, to protect the mix during transit.
3. Insulation, if required, so that the mix can be delivered to the paving machine at the specified temperature or not more than 25 degrees F. less than the discharge temperature at the plant.

J. Do not place bituminous mixed material when the surface on which the material to be placed is wet or otherwise unsuitable; the air temperature is below 40 degrees F.; or when other conditions would prevent the proper placing and compacting of the mix.

2.02 BITUMINOUS REQUIREMENTS - HOT MIX PAVEMENTS

A. Conform to Article 2.01.

B. Hot mix ingredients: fine and coarse aggregate, chemical additive (if required), fill (if required), and asphalt cement of penetration gauge 60-70 or 85-100 meeting the requirements of AASHTO M-20 for the grade used.

C. Chemical additive: heat-stable, anti-stripping containing no ingredient harmful nor altering the characteristics of the bituminous material. Use the percentage of

additive recommended by the manufacturer.

D. Hot Mix Plant:

1. Storage tanks capable of heating and maintaining the bituminous material at a uniform temperature between 275 and 325 degrees F. before begin introduced into the mixer.
2. Heat and dry aggregates to a uniform temperature between 225 and 325 degrees F. without damaging or contaminating the aggregate.
3. For batch plants, include a means of accurately weighing each size aggregate and the bituminous material. Use platform truck scales at continuous mixing plants.
4. Use twin pugmill type mixers which adequately heat and produce a uniform mixtures with a temperature of not less than 275 degrees F. at the time it is discharged from the mixer. In the case of aggregates containing absorbed moisture causing boiling or foaming, the discharge temperature may be reduced to 225 degrees F.
5. Mixing time: batch plants - as required to produce a uniform non-segregated mix that is satisfactory to the City Engineer or his agent; continuous mixing plants - as determined by current AASHTO requirements.

2.03 HOT MIX BASE

A. Conform to Articles 2.01 and 2.02.

B. Coarse aggregates (retained on the No. 4 sieve): crushed stone, crushed slab, or a combination of these materials conforming to AASHTO M-62, except that the sulphate soundness loss shall not exceed 9%. Crushed slag shall not contain more than 20% by weight of glassy particles.

C. Fine aggregate: crushed stone or crushed slab, stockpiled separately from the coarse aggregate with sodium sulphate soundness loss not exceeding 15%.

D. Combined course and fine aggregate grading:

Sieve Size	Percent Passing by Weight
2"	100
1-1/2"	75-100
3/4"	45-70
3/8"	30-55
No. 4	20-40
No. 8	10-30
No. 30	5-20
No. 200	0-8

E. Proportions, by weight, of the total mixture:

Mineral Aggregate	94.0 to 97.5%
Asphalt Cement	2.5 to 6.0%

2.04 HOT MIX BINDER

A. Conform to Articles 2.01 and 2.02.

B. Coarse aggregate (retained on the No. 4 sieve): crushed stone, crushed slag, crushed gravel, or a combination of these materials with a sodium sulphate soundness loss not exceeding 9% and no crushed slag containing more than 20%, by weight, of glassy particles.

C. Fine aggregate: natural sand; sand manufactured from stone gravel or slag; or a combination of these material with a sodium sulphate soundness loss not exceeding 15% and natural sand finer than 200 mesh not exceeding 5%.

D. Combined coarse and fine aggregate grading:

Sieve Size	Percent Passing by Weight
1-1/2"	100
3/4"	65-90
No. 4	30-55
No. 8	20-45
No. 30	8-25
No. 100	1-12
No. 200	0-7

E. The combination of aggregates and bitumen shall be such that the mixture shall have a stability of at least 1000 pounds when tested in accordance with ASTM D-1559.

F. Proportions, by weight, of the total mixture:

Mineral Aggregate	94.0 to 97.5%
Asphalt Cement	2.5 to 6.0%

2.05 HOT MIX LEVELING COURSE

A. Conform to Articles 2.01 and 2.02.

B. Coarse Aggregate: as in Article 2.04.

C. Fine Aggregate: as in Article 2.04.

D. Combined coarse and fine aggregate grading:

Sieve Size	Percent Passing by Weight
3/4"	100
3/8"	60-85
No. 8	20-40
No. 30	7-22
No. 100	1-12
No. 200	0-8

E. Aggregate-bitumen combination: as in Article 2.04.

F. Mixture Proportions: as in Article 2.04.

2.06 HOT MIX SURFACE COURSE (CRUSHED LIMESTONE)

A. Conform to Articles 2.01 and 2.02.

B. Coarse aggregate (retained on the No. 4 sieve): crushed limestone with a sodium sulphate soundness loss not exceeding 9% meeting AASHTO M-62 with the above exceptions.

C. Fine aggregate: natural or manufactured sand with material finer than 200 mesh in natural sand not exceeding 5%; meeting ASTM D-1073 except:

1. When used on traffic lanes, use aggregate of not less than 50% crushed limestone and not more than 50% or less than 45% natural sand or sand manufactured from siliceous material.
2. When used for non-traffic lane construction, aggregate may be composed entirely or in part of crushed limestone, but not more than 50% natural sand.
3. When used for curb construction, the material passing the No. 200 sieve shall be 5-10%.
4. Mineral filler, Portland cement, or limestone dust meeting the requirements of AASHTO M-17 shall be added to the mix, if required, to meet gradation requirements and shall be considered a part of the limestone percentage.
5. Not more than 5% of the natural sand shall be retained on the No. 4 sieve.

D. Combined coarse and fine aggregate grading:

Sieve Size	Percent Passing by Weight
1/2"	100
3/8"	88-100
No. 4	56-80
No. 8	40-60
No. 30	18-38
No. 50	8-26
No. 100	5-15
No. 200	2-10

E. Proportions, by weight, of the total mixture:

Mineral Aggregate	92.0 to 95.0%
Asphalt Cement	5.0 to 8.0%

2.07 HOT MIX SURFACE COURSE (CRUSHED GRAVEL, SLAG OR GRANITE)

A. Conform to Articles 2.01 and 2.02.

B. Treat asphalt cement with a heat-stable, anti-stripping additive blended at the terminal or at the mixing plant.

C. Coarse aggregate (retained on the No. 4 sieve): meeting AASHTO M-62, except:

1. Sodium sulphate soundless loss not exceeding 9%.
2. Use crushed gravel of siliceous particles, processed from washed material; with at least 85% having one or more fractured faces.
3. Use crushed slag with not more than 30% glassy particles.
4. Do not use limestone or other aggregates tending to polish under traffic.

D. Fine aggregate: natural sand, granite, screenings, slag screenings, or a combination of these materials meeting ASTM D-1073, except:

1. When the combined aggregate includes crushed gravel or natural sand, use agricultural limestone in an amount of not less than 10% nor more than 20% of the aggregate, by weight.
2. Agricultural limestone shall also be permitted, as specified, in crushed slag or crushed granite aggregate if required to meet gradation requirements.

E. The combined coarse and fine aggregates, with the required amount of bitumen, shall comply with the following Marshall test criteria:

Minimum Stability	1200 pounds
Void Content	3-7%
Flow	8-15%

F. Mineral filler may be added, if required, in an amount not to exceed 5% of the aggregate, by weight.

G. Combined coarse and fine aggregate grading:

Sieve Size	Percent Passing by Weight
1/2"	100
3/8"	88-100
No. 4	56-80
No. 8	40-60
No. 30	18-38
No. 50	8-26
No. 100	5-15
No. 200	2-10

2.08 HOT MIX LEVELING COURSE FOR WEARING SURFACE

A. Conform to Articles 2.01 and 2.02.

B. Coarse aggregate: crushed stone, crushed gravel, or crushed slag with:

1. Crushed gravel processed from washed material and consisting of siliceous particles, or which at least 50% of the material retained on the No. 4 sieve shall have one or more fractured faces.
2. No uncrushed particles.
3. The absorption of the gravel retained on the No. 4 sieve shall not exceed 5% when tested in accordance with AASHTO T-85.

C. Fine aggregate: natural sand, crushed slab sand, stone screenings, or agricultural limestone with:

1. When the coarse aggregate of the combined aggregate is crushed stone, use not less than 40% nor more than 50%, by weight, natural sand or crushed slag sand.
2. When the crushed aggregate of the combined aggregate is crushed gravel or crushed slag, use not less than 15% nor more than 40% stone screenings or agricultural limestone.

D. The combined coarse and fine aggregates with the required amount of bitumen, shall have a stability of not less than 800 pounds when tested in accordance with ASTM D-1559.

E. Combined coarse and fine aggregates grading:

Sieve Size	Percent Passing by Weight
3/4%	100
3/8%	70-100
No. 8	40-70
No. 30	20-50
No. 100	2-12
No. 200	0-8

F. Proportions, by weight, of the total mixture:

Mineral Aggregate	93.0 to 96.0%
Asphalt Cement	4.0 to 7.0%

2.09 GENERAL REQUIREMENTS - COLD MIX PAVEMENTS

A. Conform to Article 2.01.

B. Cold mix ingredients: fine and coarse aggregates and emulsified asphalt, mixing grade AE-3.

C. Emulsified asphalt: homogeneous and of such stability that it remains uniform while being mixed with dry aggregate. The emulsion shall thoroughly coat and adhere firmly to the surface of the mineral aggregate and show no signs of re-emulsifying after being incorporated into the work. The emulsion shall meet the following requirements.

1. Distillation to a temperature of 500 degrees F., not more than 30% distillate, by weight, with oil portion not more than 6% by volume.
2. Viscosity, saybolt-furol, 122 degrees F., sec. shall be 50 plus, and pumpable.
3. Settlement test at 5 days, not more than 5% (Settlement shall be waived if the emulsion is manufactured and used in less than five days).
4. Stone coating test, at least 90% coated.
5. Tests on Residue from Distillation:

   a. Float test at 140 degrees, F., not less than 200 sec.

   b. Ductility at 77 degrees F., not less than 40 cm.

   c. Solubility in $CC1_4$, not less than 97.5%.

d. Ash by ignition, not more than 2%.

6. Base asphalt: show a negative result when tested with standard Naphtha Solvent.
7. Test emulsion in accordance with AASHTO-T-5A, except as follows:

   a. Spot Test, AASHTO T-102

   b. Solubility in $CC1_4$, AASHTO T-44

   c. Float test, AASHTO T-50

   d. Stone Coating Test, AASHTO T-59, except mix the aggregate and emulsion for five minutes then drench with approximately twice its volume of tap water at room temperature.

D. Cold Mix Mixing Plant: meet the requirements of Article 2.01, except:

1. If the storage tanks for bituminous material are equipped to heat the material, the temperature of the bituminous material shall not exceed 180 degrees F. when combined with the aggregate.
2. Dry the aggregate sufficiently to remove all surface moisture and heat to a temperature which produces the discharge temperature of the mixture specified in the job-mix formula if the mixer is not heated. The temperature of the mixture shall not be less than 100 degrees F. nor more than 200 degrees F.
3. Mixing time for both batch and continuous mixing plants shall be that required to produce a uniform, homogeneous mixture that is satisfactory to the City Engineer or his agent.

2.10 COLD MIX BASE

A. Conform to Articles 2.01 and 2.09.

B. Aggregate: crushed stone or crushed slab meeting AASHTO M-62 except:

1. Sodium sulphate soundness loss shall not exceed 9%.
2. Crushed slag: not more than 20%, by weight, of glass particles.
3. Produce in two fractions, separated on a 1-1/2" screen.
4. Choker aggregate: crushed stone, crushed slag, or crushed gravel of size No. 68.

C. Combined aggregate size grading:

Sieve Size	Percent Passing by Weight
3"	100
2-1/2"	95-100

D. Proportions, by weight, of total mixture:

Mineral Aggregate	95.0 to 97.0%
Emulsified Asphalt	3.0 to 5.0%

2.11 COLD MIX SURFACE COURSE

A. Conform to Articles 2.01 and 2.09.

B. The mix may be transported directly to the project site for spreading or may be stockpiled. Stockpiled material shall show no stripping or weather damage.

C. Aggregate: crushed stone or crushed slag meeting AASHTO M-63, except:

1. Sodium sulphate soundness loss shall not exceed 9%.
2. Crushed slag retained on the No. 4 sieve shall not contain more than 20% of glassy particles.
3. Aggregate for this mixture shall be Size No. 68.
4. Choker aggregate: size No. 8 of crushed stone, crushed slag, or crushed gravel.

D. Proportion, by weight, of total mixture:

1. Mineral Aggregate: 93.0 to 95.0%
2. Emulsified Asphalt: 5.0 to 7.0%

2.12 PRIME COAT

A. Bituminous material: emulsified asphalt or cut-back asphalt.

B. Emulsified Asphalt, Grade AE-P:

Viscosity	10 minimum, 50 maximum
Furol at 77 Degrees F	
Settlement at 5 days	5%
Sieve Test	1.10%
Distillation to 500 degrees F	
Distillate, by weight	55%
Oil Portion of Distillate	12%
Tests on Residue	
Float Test, 140 degrees F., Sec. 20	
Soluble in $CC1_4$	97.5%

The settlement test shall be waived if the emulsion is used in less than 5 days. The base asphalt shall show a negative result when tested by the spot test. The emulsion shall be tested in accordance with AASHTO T-59 except:

1. Spot test, AASHTO T-102
2. Solubility in $CC1_4$, AASHTO T-44
3. Float test, AASHTO T-50

C. Cut-Back Asphalt: Grade RC-70 or RC-250 meeting the requirements of AASHTO M-81 for the grade specified or selected.

D. Application temperature for the bituminous material:

RC - 70	80 degrees - 150 degrees F.
RC - 250	100 degrees - 175 degrees F.
AE – P	60 degrees - 140 degrees F.

2.13 TACK COAT

A. Bituminous Material: emulsified asphalt or cut-back asphalt.

B. Emulsified Asphalt:

1. Grade SS-1, RD-1, and RS-2 meeting the requirements of AASHTO M-140 for the grade specified.
2. Grade AE03 shall meet the requirements of article 2.09.

C. Cut-Back Asphalt: Grade RC-70 or RC-250 meeting the requirements of AASHTO M-81 for the grade specified or selected.

D. Application temperature for the bituminous materials:

RC-70	80 degrees - 150 degrees F.
RC-250	100 degrees - 175 degrees F.
SS-1	60 degrees - 140 degrees F.
RS-1	60 degrees - 140 degrees F.
RS-2	60 degrees - 140 degrees F.
AE-3	60 degrees - 140 degrees F.

2.14 DOUBLE BITUMINOUS SURFACE TREATMENT

A. Double Bituminous Surface Treatment: bituminous mat composed of between 50 and 65 pounds per square yard of mineral aggregate bonded with bituminous material.

B. Bituminous Material: emulsified asphalt (AASHTO M-140) grade RS-2 or cut-back asphalt (AASHTO M-81), grade RC 800 or RC 3000.

C. Mineral Aggregate: AASHTO M-43, except:

1. The sodium sulfate soundness loss shall not exceed 9%.
2. Crushed slag aggregate retained on the No. 4 sieve shall not contain more than 20%, by weight, of glassy particles.
3. The amount of material finer than 200 mesh shall not exceed 1%.
4. Testing may be required by the City Engineer or his agent for bituminous film retention. When required, test in accordance with AASHTO T-182. Retention must be in excess of 95% or use a satisfactory chemical additive.
5. Aggregate in mat: Size No. 6 and the aggregate used in the seal shall be size No. 7.

D. Application Temperature ranges:

1.	RC-800	(175 - 250 degrees F)
2.	RC-3000	(200 - 275 degrees F)
3.	RS-2	(60 - 140 degrees F)

E. Only apply to a surface which is dry and clean, between April 1 and November 1, and when the air temperature is above 60 degrees F in the shade.

F. Aggregate shall be approved by the City Engineer or his agent based on test reports and sieve analysis to be furnished by the Contractor. The bituminous material shall be accepted based on laboratory analysis furnished with each shipment of material.

PART 3 EXECUTION

3.01 PREPARATION

A. Construct bases and subgrades in conformance with Section 31 11 00.

B. Obtain approval of Engineer of Record for the mix and surface to be treated prior to placing any materials.

C. Protect all adjacent trees, surfaces and structures from the bituminous material during construction.

D. Prepare all receiving surfaces in reasonably close conformity with the lines, grades and cross-sections shown on the drawings.

3.02 LIMITATIONS FOR HOT MIX PAVEMENTS

A. Place bituminous plant mix only on an accepted subgrade.

B. The subgrade and the surface upon which the bituminous plant mix is placed shall be free of excessive moisture.

C. Place in accordance with the temperature limitations of the following table and only when weather conditions otherwise permit the pavement to be properly placed, compacted and finished.

Temperature Limitations

Compacted Thickness	Minimum Placement Temperature Air or Surface (whichever is less)
Less than 1-1/2”	50 degrees F.
1-1/2” or More	40 degrees F.

3.03 MIXING HOT MIX PAVEMENTS

A. Measure and combine dried aggregates and the bituminous material within the mixer in the amount specified by the job-mix formula.

B. After the required materials have been introduced into the mixer, mix until a complete and uniform coating of the particles and a thorough distribution of the bituminous material throughout the aggregate is secured.

C. Wet-mixing time shall be determined by the City Engineer or his agent for each plant and type of aggregate used, but in no case less than 25 seconds for batch plants and 40 seconds for continuous mix plants.

D. The temperature of the completed mixture, (determined at the time it is dumped from the mixer) made with aggregates containing absorbed moisture which causes foaming or boiling shall be not less than 225 degrees F.

E. The temperature for Grading A-S mixture shall be between 225 and 275 degrees F.

3.04 SPREADING AND FINISHING HOT AND COLD MIX PAVEMENTS

A. Deliver and spread bituminous mixtures in ample time to secure thorough compaction during daylight hours.

B. Deposit the mixture in the paver hopper within 25 degrees F. of the temperature at which it was discharged from the mixer.

C. Place the mixture upon an approved surface, spread and strike off to the established line, grade and elevation by means of approved asphalt paving machines.

D. Echelon paving shall not be permitted on 2-lane projects where traffic is being maintained.

E. Control alignment of the outside edge of the pavement by present control string lines.

F. For multi-course pavement, the longitudinal joint in one layer shall offset that in the layer immediately before by approximately one foot; for 2 lanes of width, the joint in the top layer shall be at the centerline or at lane lines if the roadway is more than two lanes in width.

G. Coordinate plant production and paving operations so that a uniform continuity of operation is maintained.

H. Use automatic screen controls of either the string line or ski type grade reference system on all work regardless of the paver width.

1. The string line reference system may be required on new construction.
2. If the base has been finished with equipment having automatic grade control or the contractor demonstrates that an alternate method of spreading and finishing shall result in a satisfactory riding surface, the City Engineer or his agent may conditionally waive the string line requirement and authorize use of the ski type reference system.
3. The City Engineer or his agent may at any time require the use of a string line reference system, even if previously waived, if the line system shall result in a superior riding surface.
4. When the string line system is required on a multi-course pavement, use at least two courses exclusive of the surface course.

5. For the ski type system use the maximum practical length not less than forty feet.
6. Pavement lanes previously placed with automatic controls or to form grade may serve as longitudinal control reference for placing adjacent lanes by utilizing a ski or joint matching shoe.

I. String line reference system: suitable wire or twine supported by approved devices compatible with the automatic paver control system.

1. The string line and supports shall be capable of maintaining the line and grade designated by the Plans at the point of support while withstanding the tension necessary to prevent sag in excess of 1/4" between support spaced 50 feet apart.
2. Install additional supports to provide a minimum spacing of 25 feet, or less as directed by the City Engineer or his agent, to remove the apparent deviation of the string line from theoretical grade.
3. Establish the reference system from the control points prescribed on the plans.
4. Maintain the reference system until its use is no longer required.
5. The string line reference system shall be complete in place at least 300 feet in advance of the point where the pavement is being placed.

J. Automatic screen controls shall not be required on section where service connections or other conditions interfere with their efficient operation.

K. On areas where irregularities or unavoidable obstacles make the use of mechanical spreading and finishing equipment impracticable, take the mixture from the hopper of the spreading machine and distribute immediately into place by means of suitable shovels and other tools and spread with rakes and lutes in a uniformly loose layer of such depth resulting in completed course having the required thickness.

3.05 COMPACTION OF HOT AND COLD MIX PAVEMENTS

A. After the bituminous mixture has been spread, struck off, an surface irregularities adjusted, it shall be thoroughly compacted.

B. The method employed must be approved by the City Engineer or his agent and be capable of compacting the mixture to the specified density while it is in a workable condition.

C. When no density requirements are specified, employ a system of compaction for roadway pavement which has previously produced required densities. A control strip and random density samples may be employed to aid the City Engineer or his agent in evaluating the system.

D. Minimum Roller Requirements:

1. For each paver 16 feet wide or less use two rollers.
2. For each paver 16-26 feet wide, use three rollers.
3. For each paver 26 feet wide or more, use four rollers.
4. Increase the number of rollers if the required results are not begin obtained.

E. The minimum number of rollers listed above may, with the approval of the City Engineer or his agent, may be on the following types of construction:

1. On shoulder construction
2. On incidental construction such as bridge approaches, driveways, etc.
3. On projects containing less than 10,000 square yards of bituminous pavement.

F. Begin rolling at the low side and proceed longitudinally parallel to the road centerline.

1. When paving in echelon or abutting a previously placed lane, roll the longitudinal joint first, followed by the regular rolling procedure.
2. When paving an echelon, do not compact within six inches of an edge where an adjacent lane is to be placed.
3. Roll at a slow uniform speed with the drive wheels nearer the paver and keep as nearly as possible in continuous operation.
4. Continue rolling until all roller marks are eliminated.

G. To prevent adhesion of the mixture to the rollers, properly moisten with water or water mixed with very small quantities of detergent or other approved material. An excess of liquid shall not be used.

H. Do not park or refuel rollers on the bituminous pavements.

3.06 REQUIRED DENSITY OF HOT MIX PAVEMENTS

A. Bituminous plant mix base, Grading A and B (Black Base and Binder). An average of 90% of maximum theoretical density with no individual test less than 87%. Density requirements for these mixes shall be waived if placed in lifts of two inches or less.

B. Bituminous plant mix base, Grading C (Leveling). Same as for Grading A and B except, density requirements of this mix shall be waived if placed in lifts of 1-1/4" or less.

C. Bituminous plant mix base, Grading C-W (Leveling-Wearing). An average density not less than 88% of maximum theoretical density with no individual test less than 85%. Density requirements on this mix shall be waived if placed in lifts 1-1/4" or less.

D. Bituminous sand-gravel binder or surface course. An average of 85% of maximum

theoretical density test less than 82%.

E. Asphaltic concrete surface course, Grading D and E. An average of 93% of laboratory density as determined by the Marshall Method, 75 blow with no individual test less than 90%. When these mixes are used for shoulder construction, the average density shall not be less than 88% of maximum theoretical density with no individual test below 85%. Density requirements for these mixes shall be waived if placed in lifts of one inch or less.

F. Asphaltic surface course, Grading F and sand-asphalt surface course. An average of 92% of laboratory density as determined by the two-inch Hubbard-Field Method with no individual density test less than 89%. Density requirements on this mix shall be waived if placed in lifts of 3/4 inch or less.

G. For density testing purposes, divide the pavement into lots of approximately 10,000 square yards, except for Grading "A" and "B" with lots of approximately 5,000 square yards. Perform five density tests in each lot and compare the average results with the requirements listed above.

3.07 JOINTS FOR HOT MIX PAVEMENTS

A. Rollers shall not pass over the unprotected end of a freshly laid mixture unless authorized by the City Engineer or his agent.

B. Form transverse joints by cutting back on the previous run to expose the full depth of the course.

C. When directed by the City Engineer or his agent, use a brush coat of bituminous material on contact surfaces of transverse joints just before additional mixture is placed against the previously rolled material.

3.08 SEPARATING COLD MIX AGGREGATES

A. Produce the aggregate for the bituminous mixtures in two fractions:

1. Separate Mix No. 1 on the 1-1/4", 1-1/2" or 1-3/4" screen.
2. Separate Mix No. 2 on the 1" or 1-1/4" screen.

3.09 MIXING COLD MIX PAVEMENTS

A. Measure and combine the aggregate and the bituminous material within the mixer in the amount specified by the job-mix formula.

B. The temperature of the bituminous material shall not exceed 180 degrees F. when combined with the mineral aggregate.

C. Mix the materials until a complete and uniform coating of the aggregate particles and a thorough distribution of the bituminous material throughout the aggregate is secured.

D. The mixing time shall be determined by the City Engineer or his agent for each plant and type of aggregate used.

E. The temperature of the completed mixture, determined at the time it is dumped from the mixer, shall not be less than 110° F nor more than 200° F.

3.10 PLACING PRIME COAT

A. Seasonal and temperature limitations for applying bituminous prime coat shall conform to the same requirements as those specified for the succeeding stage of construction except the prime may be applied to a surface which is slightly damp, but not wet.

B. Apply bituminous material to the width of the section to be primed with a pressure distributor at a uniform, continuous spread of 0.30 to 0.35 gallons per square yard.

C. Correct any areas containing an excess of deficiency of priming material by adding blotter material or bituminous material.

D. If after the bituminous material has been applied, it fails to penetrate before the time the roadway must be used by traffic, spread dry cover material between 8 and 12 pounds per square yard, to prevent damage to the primed surface. Avoid an excess of cover material.

3.11 PLACING TACK COAT

A. Immediately after cleaning the surface, apply bituminous material with a pressure distributor at a rate not exceeding 0.05 gallon of residual bitumen per square yard for all materials except asphalt cement.

B. For asphalt cement AC-20, apply at the rate of 0.05 to 0.10 gallons per square yard.

C. Allow the tacked surface to dry until it is in a proper condition to receive the next course.

D. Apply only so far in advance of the paving operations as is necessary to obtain the proper condition of tackiness.

E. Protect the tack coat from damage until the next course is placed.

3.12 DOUBLE BITUMINOUS SURFACE TREATMENT

A. Make the first application of bituminous material by pressure distributors at a uniform rate of between 0.38 and 0.442 gallons per square yard.

B. Each width of spread shall not be less than one-half the surface to be treated.

C. Before beginning each spread, lay building paper across the roadway surfaces with the forward edge exactly coinciding with the end of the preceding covered spread.

D. Start distributors on the paper, the width of which shall be such that the full force of all nozzles shall be in effect before the forward edge of the paper is reached.

E. Correct all defects in any application, at once.

F. Treat areas which are inaccessible to the distributor either with hand sprays or pouring pots.

G. If less than the full width of roadway is being treated, do not spread aggregate on the inside 6 inches of either the first of second application until the adjacent lane has been treated.

H. Immediately after each application, cover uniformly with Size No. 6 mineral aggregate reasonably free of surface moisture.

I. Spread the aggregate by self-propelled mechanical spreaders between 30 and 40 pounds per square yard. Back the truck on the aggregate being spread and not on or over uncovered bituminous material.

J. The length of spread of bituminous material shall not be in excess of that which trucks loaded with cover material can immediately cover.

K. Apply the second application of bituminous material in the same manner as the first application., at a uniform rate between 0.30 and 0.35 gallon per square yard as established by the City Engineer or his agent

L. Spread mineral aggregate, Size No. 7, in the same manner as the first spread at a rate of 20 to 25 pounds per square yard.

M. Hand-brown each spread of cover aggregate for uniform coverage. Place additional aggregate by hand on thin or bare areas.

N. Roll the entire surface, beginning at the edges and progressing to the center, within 30 minutes after spreading. Initial rolling shall normally be done with a pneumatic tire roller, followed by steel wheel rolling.

O. Allow the first application to cure for such length of time as deemed necessary before the second application is begun. Immediately before the second application of bituminous material, roll the surface with a steel-wheel roller.

P. Repeat the same rolling and curing procedures required in making the first application for the second application.

Q. Allow slow-moving traffic to use sections of the roadway where the bituminous material has been covered with mineral aggregate.

3.13 MEASUREMENT AND PAYMENT OF BITUMINOUS PAVEMENT AND COVER MATERIALS

A. Bituminous pavements and cover materials shall be measured for payment by the ton mixed, spread, rolled and finished including all mix ingredients. Water used to dampen the base prior to applying prime coat shall not be measured for payment.

B. When provided for on the Bid Form, bituminous pavement and cover materials as above stipulated shall be paid for by the Contract unit price per ton of the various types shown on the Bid Form. Dampening water as above stipulated shall not be paid for directly. When not provided for on the Bid Form, bituminous pavement and cover materials shall not be made directly, but shall be included in the payment for the items with which it is associated.

3.14 MEASUREMENT AND PAYMENT OF PRIME COAT

A. Prime coat when provided for on the Bid Form shall be measured for payment by the square yard in place.

B. When provided for on the Bid Form, prime coat as stipulated above shall be paid for at the Contract unit price per square yard. When not provided for on the Bid Form, payment for prime coat shall not be made directly, but shall be included in the payment for the items with which it is associated.

3.15 MEASUREMENT AND PAYMENT OF TACK COAT

A. Tack coat when provided for on the Bid Form shall be measured for payment by the square yard in place.

B. When provided for on the Bid Form, tack coat as stipulated above shall be paid for at the Contract unit price per square yard. When not provided for on the Bid Form, payment for tack coat shall not be made directly, but shall be included in the payment for the items with which it is associated.

3.16 MEASUREMENT AND PAYMENT OF DOUBLE BITUMINOUS SURFACE TREATMENT

A. Double bituminous surface treatment when provided for on the Bid Form shall be measured for payment by the square yard in place.

B. When provided for on the Bid Form, double bituminous surface treatment as stipulated above shall be paid for at the Contract unit price per square yard. When not provided for on the Bid Form, payment for double bituminous surface treatment shall not be made directly, but shall be included in the payment for the items with which it is associated.

END OF SECTION

SECTION 32 13 13

PORTLAND CEMENT CONCRETE PAVING

PART 1 GENERAL

1.01 WORK INCLUDED

A. Formwork complete with required shoring, bracing and anchorage.

B. Concrete reinforcing, complete with required supports, spacers and related accessories.

C. Cast-in-place concrete.

1.02 RELATED WORK

A. Specified elsewhere:

1. Section 03 30 00: Concrete Work
2. Section 31 11 00: Clearing and Grubbing
3. Section 31 22 00: Grading and Excavating
4. Section 31 22 16: Base and Subgrade Treatment

PART 2 PRODUCTS

2.01 Use Class "P" Concrete as specified in Section 03 30 00.

PART 3 EXECUTION

3.01 PREPARATION OF BASE

A. Construct or correct the base to such grade tolerances which insure the concrete pavement thickness required in accordance with Section 31 22 16.

B. Complete base work not less than 500 linear feet in advance of paving.

C. The base grading machine and slip-form paver shall be equipped with automatic line guidance and grade controls.

3.02 FORMWORK

A. Base Support:

1. Set each form firmly in contact for its whole length and at the specified grade.
2. Fill and compact areas below grade with suitable material in lifts of 1/2 inch

or less for a distance of 18 inches on each side of the base of the form.

3. Tamp or cut any grade at the form line found above grade.
4. Do not use pedestals of earth or other material upon which to rest the forms to bring them to grade.

B. Form Setting:

1. Set forms a minimum of 500 feet in advance of the point where concrete is being placed, except as approved by the Engineer of Record.
2. After the forms have been set to correct grade, tamp the material supporting the forms at both the inside and outside edges of the base of the forms.
3. Stake forms into place with not less than three pins for each 10 foot section and with a pin at each side of every joint.
4. Lock form section to be free from ply or movement in any direction.
5. Do not allow forms to deviate from true line by more than 1/4 inch at any point.
6. Reset or remove forms which settle or spring under the spreading and finishing equipment.
7. Clean and oil the top and face of forms prior to the placing of concrete.

C. Grade and Alignment:

1. Check and correct the alignment and grade elevation of the forms immediately before placing the concrete.
2. When any form has been disturbed or any grade has become unstable, rest and recheck the form.

3.03 RETEMPERING

A. The retempering of concrete which has partially hardened by the addition of any ingredient shall not be permitted except in special emergencies. In such emergencies, water and portland cement may be added at the rate of 5 gallons of water per sack of cement.

3.04 CONCRETE PLACING

A. Unload the concrete into an approved spreading device, or deposit on the base. Mechanically spread in such a manner to prevent segregation of the materials.

1. When central or transmit mixed concrete is used, place the mixture where it requires as little rehandling as possible.
2. The mechanical spreader is not required on areas too small to accommodate the paving equipment, projects which contain 10,000 square yards or less nor on variable width sections and ramps.
3. Continuously place between transverse joints without the use of intermediate bulkheads.

4. Perform necessary hand spreading with shovels, or other approved tools.
5. Do not allow workmen to walk in the freshly mixed concrete with boots or shoes coated with foreign substances.

B. Where concrete is to be placed adjoining a previously constructed lane of pavement and mechanical equipment is operated upon the existing lane of pavement, that land shall meet the requirements for opening to traffic. If only finishing equipment is carried on the existing lane, paving in adjoining lanes may be permitted after seven days.

C. Consolidate concrete against and along the faces of all forms and along the full length and on both sides of all joint assemblies, by means of vibrators inserted in the concrete.

1. Do not permit vibrators to come in contact with a joint assembly, the grade, or a side form.
2. Do not operate the vibrator longer than 5 seconds in any one location.
3. Use hand operated vibrators only on projects which contain 10,000 square yards or less of concrete paving and on variable width sections and ramps.
4. Operate vibrators mounted on a machine only while in motion.

D. Deposit concrete as near to expansion and contraction joints as possible without disturbing them, but do not dump from the discharge bucket or hopper onto a joint assembly unless the hopper is well centered on the joint assembly.

E. Should any concrete materials fall on or be worked into the surface of a complete slab, remove immediately by approved methods.

F. When the slip-form method of concrete paving (without the use of fixed forms) is used, place the concrete with an approved slip-form paver designed to spread, consolidate, screed and float-finish the freshly placed concrete in one complete pass of the machine in such manner that a minimum of hand finishing is necessary to provide a dense and homogenous pavement.

1. The machine shall vibrate the concrete for the full width and depth of the strip of pavement being placed.
2. Rigidly hold the sliding forms together to prevent spreading of the forms.
3. The forms shall trail behind the paver for such a distance that no appreciable slumping of the concrete occurs and that necessary finishing can be accomplished while the concrete is still within the forms.
4. Correct any edge slump of the pavement, exclusive of edge rounding, in excess of 1/4 inch before the concrete has hardened.
5. Operate the slip-form paver with as nearly a continuous forward movement as possible to provide uniform progress with stopping and starting of the paver held to a minimum. If, for any reason, it is necessary to top the forward movement of the paver, stop the vibratory and tamping elements immediately.

6. Do not apply any tractive force to the machine, except that which is controlled from the machine.

3.05 CURING

A. Cure concrete in accordance with applicable articles of Section 03 30 00.

3.06 JOINTS

A. Construct joints of the type and dimensions shown on the drawings.

B. Longitudinal joints shall be perpendicular to the pavement surface and parallel to the center-line of the pavement, unless otherwise specified.

C. Transverse joints shall be straight, vertical to the pavement surface and at the angles to the center-line of the pavement shown on the Plans.

D. Unless otherwise specified, all contraction and construction joints shall be of the plain and sawed groove or insert and sawed groove type, except that when limestone coarse aggregate is used, the joints shall be the plain sawed groove type.

E. Longitudinal Joints:

1. Place deformed steel tie bars of specified length, size, spacing, and materials across and perpendicular to the longitudinal joints by approved mechanical equipment or rigidly secure by chairs or other approved supports to prevent displacement.
2. When adjacent lanes of pavement are constructed separately, form a keyway along the construction joint of the first lane constructed by the use of one of the alternate metal center strip types detailed on the Plans.

    a. Tie bars may be bent at right angles against the form and straightened its final position before the concrete of the adjacent lane is placed, or they may be placed in holes drilled through the forms.

    b. Tool construction joints to a 1/4-inch radius during finishing operations before sawing.

3. Cut longitudinal sawed joints by means of approved concrete saws to the depth, width and line shown on the Plans, not later than 10 days after placing concrete and before any equipment or vehicles are allowed on the pavement.
4. Inserts which are to be sawed shall be an approved rigid material of the thickness and width shown on the Plans with a length equal to one-half the pavement width for transverse joints and not less than 10 feet for longitudinal joints. Do not use insert material which cracks, shatters, warps during installation, or which leaves a residue from sawing which may prevent seal

material from adhering to the concrete.

5. After the concrete has sufficiently set, saw the insert to the width and depth shown on the Plans, leaving the remainder of the insert in place.
6. Immediately after sawing, clean all longitudinal contraction and construction joints of all residue by flushing with water under pressure.
7. As an alternate to sawing, form the longitudinal contraction joints by placing a continuous strip of polyethylene sheeting having a minimum thickness of 10 mils, a width of 1/3 the total thickness of the concrete being placed and not react adversely with the chemical constituents of the concrete.
8. The joint insert material when placed vertically in the concrete, shall not bond with the concrete but shall form an effective weakened plan joint of the specified depth.

    a. Insert the joint material with an approved mechanical device which places the material in a continuous strip, except where intervening structures break the continuity of paving.

    b. Splices in the joint material shall be permitted provided they maintain the continuity of the joint material.

    c. Place the joint material so that the top of the strip is not more than 1/4 inch below the finished surface of the concrete.

    d. Do not deform the joint material from a vertical position, either in the installation or in subsequent finishing operations.

    e. The mechanical installation device shall vibrate the concrete sufficiently to cause the concrete to flow evenly about the joint material producing homogeneous concrete free of segregation and rock pockets or voids.

9. The alignment of the finished joint shall meet the approval of the City Engineer or his agent.

F. Transverse Expansion Joints:

1. Hold dowels across transverse joints, parallel to the surface and center-line of the slab, by an approved metal device which is left in the slab.

    a. Paint dowels which are not corrosion resistant with one coat of approved primer.

    b. When the paint has dried and immediately before placing the dowel in position, coat the dowel with a thick film of heavy grease.

    c. Bond breaker for corrosion resistant dowels shall be as recommended by the coating manufacturer.

d. Cover one end of each dowel with a close fitting, closed end metal sleeve, not less than 4 inches long, with a flange or other approved device to separate the end of the sleeve and the end of the dowel during the placing of the concrete so that a space 1/4" greater than the thickness of the joint shall be provided.

e. Dowels shall have ends free from burrs and distortions.

2. When premolded joint filler is used, install by the use of one of the alternate expansion joint and dowel assembly devices shown on the Plans or other approved expansion joint assemblies.

a. The installing device shall have a length 1/2 inch less than the width of the slab.

b. Assemblies shall be a rigid metal device capable of holding dowels and filler firmly in position during the entire construction operation and shall remain in place.

3. Set the top of the filler below the surface of the proposed slab to accommodate the type sealant specified, as detailed on the Plans.

a. When in position, the filler shall be perpendicular to the surface of the slab.

b. Protect the top edge of the filler by an approved metal channel cap. The assembly device may be designed with this cap self-contained.

G. Transverse Contraction Joints:

1. Place contraction joints at the intervals specified.
2. Do not use formed contraction joints unless specified or required by the City Engineer or his agent to control random cracking.
3. When called for on the Plans, contraction joints shall include load transfer assemblies.
4. In lieu of using dowel assemblies, dowel bars may be placed in the full thickness of pavement by a mechanical device approved by the City Engineer or his agent.
5. Saw contraction joints as soon as the concrete has hardened sufficiently to permit sawing without excessive raveling and before uncontrolled shrinkage cracking takes place.

a. If necessary, perform sawing operations both day and night, regardless of weather conditions.

b. Omit sawing any joint if a crack occurs at or near the joint.
c. Saw all joints in sequence.

d. If extreme conditions exist which make it impractical to prevent erratic cracking by early sawing, form a contraction joint groove at intervals of every third or fourth joint or as often as required prior to initial set of concrete.

e. Immediately after sawing, clean the joints of all residue by flushing with water under pressure.

6. Transverse contraction joints made by the insert and sawed groove method shall comply with the applicable requirements for the longitudinal contraction joint.
7. Form contraction joints during the placing of the concrete.

a. Form these joints by placing inserts in the plastic concrete, at the angle to the centerline of the pavement indicated on the Plans and perpendicular to the surface.

b. When the concrete has attained its initial set and after the joint has been carefully finished, remove the insert.

c. The formed groove shall maintain its full width and depth as shown on the Plans, and the pavement at the joint shall meet surface requirements.

H. Transverse Construction Joints:

1. Construct transverse construction joints as detailed on the Plans.
2. Form grooves by one of the methods specified for longitudinal or transverse expansion joints.
3. Construct joints when there is an interruption of more than 30 minutes in the concreting operations.
4. Do not construct transverse joints within 10 feet of an expansion joint, contraction joint, or plane of weakness.
5. If sufficient concrete has not been mixed at the time of interruption to form a slab at least 10 feet long, remove and dispose of the excess concrete back to the last preceding joint.

I. Expansion Joints at Structures: Form expansion joints about all structures and features projecting through, into or against the slab by the use of premolded joint filer 1/2 inch in width.

3.07 CONCRETE FINISHING

Sequence operations to strike-off and consolidate, float and remove excess, straight-edge, then finish final surface.

A. Finishing at Joints:

1. Compact or firmly place the concrete adjacent to joins without voids or segregation against the joint material, under and around all load transfer devices, joint assembly units, and other features designed to extend into the pavement.
2. After the concrete has been placed and vibrated adjacent to the joints, bring the finishing machine forward, operating in a manner to avoid damage or misalignment of joints.
3. If uninterrupted operation of the finishing machine, to, over, and beyond the joints causes segregation of concrete, damage to, or misalignment of the joints, stop the finishing machine when the front screed is approximately 8 inches from the joint.
4. Remove segregated concrete from in front of and off the joint; lift the front screed and set directly on top of the joint then resume the forward motion of the finishing machine.
5. When the second screed is close enough to permit the excess mortar in front of it to flow over the joint, lift and carry it over the joint. Thereafter, the finishing machine may be run over the joint without lifting the screeds, provided there is no segregation in the concrete.

B. Machine Finishing:

1. Spread the concrete as soon as placed then strike off and screed by an approved finishing machine.
2. When the pan-float finisher combination machine is used, longitudinal floats are not required.
3. The machine shall go over each area of pavement as many times as necessary to give the proper consolidation and to leave a surface of uniform texture.
4. Avoid excessive operation over a given area.
5. When the second screed is close enough to permit the excess mortar in front of it to flow over the joint. Thereafter, the finishing machine may be run over the joint without lifting the screeds, provided there is no segregation in the concrete.

C. Machine Finishing:

1. Spread the concrete as soon as placed then strike off and screed by an approved finishing machine.
2. When the pan-float finisher combination machine is used, longitudinal floats are not required.

3. The machine shall go over each area of pavement as many times as necessary to give the proper consolidation and to leave a surface of uniform texture.
4. Avoid excessive operation over a given area.
5. Keep the tops of the forms clean by an effective device attached to the machine, and maintain travel on the forms true without lifting, wobbling, or other variation tending to affect the precision finish.
6. During the first pass of the finishing, maintain a uniform roll of concrete ahead of the front screed for its entire length. Do not move rolls of concrete in excess of 6 inches.
7. If uniform and satisfactory consolidation of the concrete is not obtained by the vibratory method throughout the pavement, furnish equipment and methods which produce satisfactory work.

D. Hand Finishing:

1. Unless otherwise specified, do not use hand finishing methods except under the following conditions:

   a. In the event of mechanical equipment breakdown when concrete has already been deposited on grade.

   b. On ramps and variable width sections, where the sue of finishing machines is impractical.

2. When hand finishing is permitted strike off and screed the concrete, as soon as placed.

   a. The screed shall be at least 2 feet longer than the maximum width of the slab to be struck off. It shall e of approved design, and sufficiently rigid to retain its shape.

   b. When reinforcement is used in the pavement, provide a strike off template for striking off the bottom layer of concrete.

3. Attain consolidation by the use of a suitable vibrator or other approved equipment.
4. Repeat screeding until the surface is of uniform texture, true to grade and cross-section, and free from porous areas.

E. Floating:

1. After the concrete has been struck off and consolidated, further smooth, true and consolidate, using one of the following methods as specified or permitted.
2. Hand Method: Use equipment and methods approved by the City Engineer or his agent.
3. Mechanical Method: Use mechanical floats unless otherwise specified.

a. Adjust the tracks from which the float operates to the required cross-section.

b. Adjust the float and coordinate with the adjustments of the transverse finishing machine so that a small amount of mortar is carried ahead of the float at all times.

c. Adjust the forward speed so that the float laps the distance specified by the City Engineer or his agent on each transverse trip.

d. Pass the float over each area of pavement at least two times, but not excessively.

e. Waste any excess water or soupy material over the side forms on each pass.

f. After floating, remove any excess water by a straightedge 10 feet or more in length.

g. Lap successive drags one-half the length of the blade.

F. Straight edging:

1. After the floating has been completed and the excess water removed, but while the concrete is still plastic, test the surface of the concrete for trueness.
2. Furnish and use an accurate metal straightedge, not less than 10 feet in length swung from handles at least 3 feet longer than one-half the width of the slab.
3. Hole the straightedge in contact with the surface in successive positions parallel to the road center-line and go over the whole area from one side of the slab to the other as necessary.
4. Advance along the road in successive stages of not more than one-half the length of the straightedge.
5. Any depressions found shall be immediately filled with freshly mixed concrete, struck off, consolidated, and refinished.
6. High areas shall be cut down and refinished.
7. Give special attention to assure that the surface across joints meets the requirements for smoothness.
8. Continue straightedge testing and surface corrections until the entire surface is found free from observing departures from the straightedge and the slab conforms to the required grade and cross-section.
9. When in the opinion of the City Engineer or his agent, superficial water is required to assist in finishing, apply by lightly fogging.
10. Follow straight edging by belting with an approved belt or hose. Do not rest belts on the pavement.

G. Final Finish:

1. The surface texture shall be a burlap drag finish.

   a. The drag shall consist of a seamless strip of damp burlap which, when dragged longitudinally along the full width of pavement, produces a uniform surface of gritty texture.

   b. For pavement 24 feet or more in width, mount the drag on a bridge.

   c. The dimensions of the drag shall be such that a strip of burlap at least three feet width is in contact with the full width of pavement surface while the drag is used.

   d. The drag shall consist of not less than two layers of burlap with the bottom layer approximately six inches wider than the upper layer.

   e. Maintain the drag in such condition that the resultant surface is of uniform appearance and reasonably free from grooves over 1/16-inch in depth.

   f. Maintain drag clean and free from encrusted mortar.

   g. Discard uncleanable drags.

2. After the pavement has been finished by the burlap drag, texture the surface by the formation of transverse grooves.

   a. Form the transverse grooves by mechanical equipment using a comb made of steel tines, vibrating beam roller, or other approved device.

   b. Manual tools such as rakes with spring steel tines may be used on areas inaccessible to mechanical equipment.

   c. Form the grooves at an appropriate time during the setting of the concrete mixture, so that the grooves are between 0.09 inch and 0.13 inch in width, between 0.12 inch and 0.19 inch in depth, and spaced at random intervals between 0.3 and 1.0 inch.

3. Regardless of the method used to form the grooves, the grooves shall be relatively smooth and uniform, and formed without excessive tearing of the surface and without bringing pieces of the coarse aggregate to the top of the surface.
4. In the event of mechanical failure, manual tools may be used for grooving, provided all mixing and placing operations cease until proper repairs are made.

5. Any individual areas of 50 square yards or larger not conforming to these requirements shall be corrected at the Contractor's expense, by the cutting of acceptable grooves in the hardened surface with an approved cutting machine, or by other approved methods.

3.08 TESTING

A. As soon as the concrete has hardened sufficiently, test the pavement surface with a 12 foot straightedge of other specified device.

B. When the straightedge is placed parallel to the centerline of the pavement, the surface shall not vary more than 1/8-inch from the lower edge of the straightedge.

C. Areas showing high spots of more than 1/8 inch, but not exceeding 1/2-inch in twelve feet, shall be marked and immediately ground down with an approved grinding tool. The ground area shall then be sealed with an epoxy resin system approved by the City Engineer or his agent.

3.09 DEFECTIVE INSTALLATION

A. Where surface deviations exceed 1/2-inch, remove and replace the pavement except for any section less than ten feet in length or less than the full width of the land involved.

B. When it is necessary to remove pavement, remove and replace any remaining portion of the slab adjacent to the joints which is less than 10 feet in length.

3.10 MEASUREMENT AND PAYMENT

A. Measurement for payment of concrete pavement installed and accepted including base preparation, concrete, formwork, curing, joints, and finishing shall be by the square yard.

B. Where the average thickness of pavement is deficient by more than 0.25 inch, but more than 1.0 inch, payment shall be made at an adjusted price as specified in the following table:

Deficiency in Thickness (inches)	Proportional Part of Contract Price Allowed for Payment
0.00 through 0.25	100%
0.26 through 0.50	75%
0.51 through 0.75	60%
0.76 through 1.00	50%

Where deficiency of greater than 1.0 inch exists, the Contractor shall remove the pavement and replace it at no extra cost to the City.

C. When provided for on the Bid Form, payment for concrete pavement as stipulated above shall be made on the basis of the Contract unit price for the following:

1.

	PAY ITEM	PAY UNIT
a.	Portland Cement Concrete Pavement (Plain) 6"	Square Yard
b.	Portland Cement Concrete Pavement (Plain) 8"	Square Yard
c.	Portland Cement Concrete Pavement (Plain) 9"	Square Yard
d.	Portland Cement Concrete Pavement (Plain) 10"	Square Yard
e.	Portland Cement Concrete Pavement (Plain) 11"	Square Yard
f.	Portland Cement Concrete Pavement (Plain) 12"	Square Yard
g.	Portland Cement Concrete Pavement (Reinforced) 6"	Square Yard
h.	Portland Cement Concrete Pavement (Reinforced) 8"	Square Yard
i.	Portland Cement Concrete Pavement (Reinforced) 9"	Square Yard
j.	Portland Cement Concrete Pavement (Reinforced) 10"	Square Yard
k.	Portland Cement Concrete Pavement (Reinforced) 11"	Square Yard
l.	Portland Cement Concrete Pavement (Reinforced) 12"	Square Yard
m.	Additional Portland Cement Concrete	Cubic Yard

2. When not provided for on the Bid Form, payment for concrete pavement shall not be made directly, but shall be included in the payment for the items with which it is associated.

END OF SECTION

SECTION 32 16 13

CONCRETE SIDEWALKS, CURBS, AND GUTTERS

PART 1 GENERAL

1.01 WORK INCLUDED

A. Form work complete with shoring, bracing and anchorage.

B. Concrete reinforcement complete with required supports, spacers and related accessories.

C. Cast-in-place concrete for curbs, gutters and sidewalks.

D. Joint work

1.02 RELATED WORK

A. Specified elsewhere:

1. Section 02 41 00: Demolition
2. Section 03 30 00: Concrete Work
3. Section 31 11 00: Clearing and Grubbing
4. Section 31 22 00: Grading and Excavating
5. Section 31 22 16: Base and Subgrade Treatment
6. Section 31 25 13: Soil and Erosion Control

PART 2 PRODUCTS

2.01 CONCRETE

A. Standard 4000 psi plant mix concrete containing Type I cement, unless otherwise specified by the City Engineer or his agent.

2.02 TREE GRATES

A. Neenah-Foundry Company model # R-8829-180 degree round x tree grates and frames with an outside diameter of 43 5/8", unless otherwise specified by the City Engineer or his agent. Two 180 degree sections are required for each tree grate, and four 90 degree frames are required for each tree grate.

2.03 BRICK PAVERS

A. Standard 4" X 8" X 1 1/4" pedestrian and light traffic brick pavers (manufactured per ASTM C902-84) shall be used unless otherwise specified by the City Engineer or his agent.

2.04 FORM MATERIALS

A. Either wood or metal, free from warp with sufficient strength to resist the pressure of the concrete without springing, extending for the full depth of concrete.

B. Concrete forms must be clean, tight and their interior surfaces coated with form oil or parting agent to allow removal of the forms from the hardened concrete without damaging the surface of the concrete.

C. Use curbed forms of proper radius on sections requiring radial formwork.

D. Use a metal strike-off template to shape the top surface of gutters or sidewalks.

2.05 JOINT MATERIALS

A. Use 1/4" thick preformed filler, unless otherwise specified by the City Engineer or his agent.

B. Cut to full cross-section of curb, gutter and/or sidewalk.

C. Joints should be true, even and of satisfactory appearance.

2.06 RIGID NON-METALLIC UNDERGROUND ELECTRICAL CONDUIT

A. Carlon Type 80 or approved equal, wall rigid PVC conduit installed per NEC, Article 347.

PART 3 EXECUTION

3.01 PREPARATION

A. Clear construction area in accordance with Section 31 11 00.

B. Compact subgrade by tamping or rolling as specified in Section 31 22 16.

C. Thoroughly wet base or subgrade prior to placing concrete.

3.02 FORMWORK

A. Place forms so finished concrete is true to line, grade and cross-sections as shown on

the drawings.

B. Forms should have uniform section lengths - maximum of 10 feet and minimum of 5 feet.

C. Brace and stake forms to maintain vertical and horizontal alignment until their removal.

D. Carefully set templates and leave in place until the concrete has set sufficiently to hold its shape. Remove templates while forms are still in place.

E. Provide expansion joints between new construction and all adjoining construction and around all existing or new utility appurtenances extending into sidewalks, unless otherwise specified by the City Engineer or his agent.

F. Expansion joints are to be placed 40 foot maximum intervals.

G. The concrete should be placed on a stone granular base of not less than 2 inches.

H. The contractor shall be responsible for the proper removal and disposal of existing concrete sidewalks.

3.03 CONCRETE PLACING

A. Deposit the concrete on the base:

1. When central or transit mixed concrete is used, place the mixture where it requires as little rehandling as possible.
2. Continuously place between transverse joints without the use of intermediate bulkheads.
3. Perform necessary hand spreading with shovels, or other approved tools.
4. Do not allow workmen to walk in the freshly mixed concrete with boots or shoes coated with foreign substances.

B. Consolidate concrete against and along the faces of all forms and along the full length and on both sides of all joint assemblies, by means of vibrators inserted in the concrete.

1. Do not permit vibrators to come in contact with a joint assembly, the grade, or a side form.
2. Do not operate the vibrator longer than 5 seconds in any one location.

C. Deposit concrete as near to expansion and contraction joints as possible without disturbing them, but do not dump from the discharge bucket or hopper onto a joint assembly.

D. Should any concrete materials fall on or be worked into the surface of a complete slab, remove immediately by approved methods.

3.05 FINISHING CONCRETE

A. When necessary, strike-off concrete using traverse templates resting on the side of the form.

B. Remove the templates, then the forms when concrete has set sufficiently to hold its shape.

C. Finish surface with floats and straightedge, when required, to a smooth even finish.

D. Round edges at templates and expansion joints with an edging tool of 1/4 inch radius.

E. Remove all tool marks with a wetted brush or wooden float.

F. Clean the top and ends of expansion joint material and trim to slightly below concrete surface.

G. Remove forms, without exerting pressure on the concrete, at any time when such removal will not damage the concrete.

H. Protect concrete work until work has been accepted.

I. After forms have been removed, cover concrete with a moisture proof membrane to insure proper hydration occurs.

J. Remedy damaged work, which has not been accepted, by removing and reconstructing each section which is damaged.

3.06 FINISHING SIDEWALKS

A. When the surface of the concrete is free from water, and just before concrete obtains its final set, finish and sweep lightly with a broom in order to produce a sandy texture.

B. The longitudinal (lengthwise) surface variation shall not be more than 1/4 inch under a 12 foot straightedge, nor more than 1/8 inch under a 5 foot transverse (widthwise) section.

C. The surface of the concrete shall be so finished as to drain completely at all times.

D. Round edges with an edging tool having a radium of 1/2 inch.

E. Divide the surface of the sidewalk into blocks by use of grooving tool.

1. Contraction joints may be machine cut into sidewalk finish after concrete has attained its initial set.
2. Contraction joints which are machine cut may not be less than one-fourth of the total sidewalk thickness in depth, nor less than 1 inch.
3. Contraction joints may be struck into place by means of templates.
4. Contraction joints placed by means of a template are to be no less than one-fourth of the total sidewalk thickness, nor less than one inch.

H. Contraction joints should be placed at a maximum of 10 foot intervals, but not less than 5 feet.

I. Do not allow pedestrians, vehicles, or loads upon concrete sidewalks until 24 hours after finishing concrete, or until the City Engineer or his agent has determined that the concrete has attained sufficient strength for such loads.

3.07 FINISHING CURBS AND GUTTERS

A. No plastering shall be permitted.

B. Unless otherwise specified, the edges of the curb and gutter shall be rounded to a radius of 3/4 inch.

C. Finish the back of curbs not less than 3 inch below the top of backfill against the curb.

D. When the use of curb machines is permitted, finish as specified above except that contraction joints may be sawed a minimum depth of 1/4 the thickness of the section at intervals not less than 6 feet nor more than 10 feet.

3.08 TREE GRATE INSTALLATION

A. Tree grate frame shall be assembled by connecting four individual framing members by means of a 1/2 inch stainless steel bolt three inches long.

B. The frame, when assembled, shall be circular and have an outside diameter of 43 5/8 inches.

C. Sufficient concrete shall be placed under the frame to bring it up to grade with the sidewalk. A minimum of 1 inch of concrete shall be placed under frame to provide an adequate foundation.

D. Concrete shall also be placed around frame hubs in a manner as to ensure adequate stability for the frame, as determined by the City Engineer or his agent.

E. Brick pavers shall be machine cut and placed perpendicularly around and flush with the grate frame.

F. The tree grate halves shall be assembled and lowered into the frame after the concrete has had adequate time to harden.

3.09 TREE GRATE SPACING

A. Tree grate spacing shall be determined in the field by the City Engineer or his agent.

3.10 WEEP HOLE INSTALLATION

A. 3/4" diameter weep holes shall be installed from the sand beds to the street curb and gutter. Spacing of the weep holes shall be on 8 foot centers.

B. A minimum of 2 weeps shall be installed into each sand bed and extended through the concrete curb to aid in drainage.

C. Install a 12" x 12" drainage member (Mirafi 140N or equal) over each weep hole or pipe. Filter fabric shall be placed under the sand bed.

D. Weep holes shall be constructed on a slight slope as to aid in drainage.

3.11 BRICK PAVER INSTALLATION

A. Standard 4" x 8.25" brick pavers shall be used unless otherwise specified by the City Engineer or his agent.

B. Brick pavers shall be free from unsightly abrasions and cracks.

C. Brick pavers shall be laid in a 1" sand bedding.

D. The sand bedding shall be screeded and compacted. Sand shall be poured and screeded, but not compacted.

E. Brick pavers shall be laid in sand bedding in a neat and orderly fashion. Spacing between pavers should be minimized as much as possible to insure a tight, compact fitting.

3.12 RIGID NON-METALLIC UNDERGROUND ELECTRIC INSTALLATION

A. Where tree wells are specified, furnish and install one run of one inch underground electrical conduit under the concrete sidewalk into each tree well.

B. Extend an electrical feed conduit from one of the tree wells to a location outside the sidewalk construction area and cap for use as directed by the City Engineer or his

agent.

C. Stub each conduit a minimum of 6 inches into each tree well and stub the electrical feed conduit up a minimum of 6 inches above the finished grade. Cap each stub out.

D. Install a metallic pull wire in each conduit.

E. No electrical wiring is required under the sidewalk contract unless specified on contract drawings.

PART 4 CONSTRUCTION STANDARDS

4.01 DRIVEWAYS

A. The construction of driveways shall be subject to city ordinances and city standard curb cuts, sidewalk crossing.

4.02 DESIGN CLASSIFICATIONS OF SIDEWALKS - SEE ATTACHED DRAWINGS

I. Design A (11 feet wide and wider)
II. Design B (9 feet wide to 11 feet wide)
III. Design C (7 feet wide to 9 feet wide)
IV. Residential Sidewalks (width of existing or as specified)

A. Design A: Mandatory Space Allocations

1. A 2 foot concrete buffer shall be placed beside a 6 inch high concrete curb.
2. A 4'-6" space shall be allocated for brick pavers.
3. At locations specified by the City Engineer or his agent, circular areas of 54 inches diameter shall be reserved for tree grates.
4. The remaining area shall be allocated for concrete walkway.

B. Design B: Mandatory Space Allocations

1. No concrete buffer shall be provided at the 6 inch curb.
2. A 2'-0-1/2" strip shall be allocated beside 6 inch high concrete curb for brick pavers.
3. At locations specified by the City Engineer or his agent, circular area of 54 inch diameter shall be allocated for tree grates.
4. The remaining area shall be allocated for concrete walkway.

C. Design C: Mandatory Space Allocations

1. No concrete buffer shall be provided at the 6 inch concrete curb.
2. A 2'-0-1/2" strip shall be allocated for brick pavers.

3. No tree grates shall be installed on Design C sidewalks.
4. The remaining area shall be allocated for concrete walkway.

D. Residential Sidewalks

1. Residential sidewalks shall contain no brick pavers, and no tree grates.
2. Residential sidewalks shall be the same width of existing sidewalk, or the width as shown on construction documents, and/or as directed by City Engineer or his agent.

4.03 MEASUREMENT AND PAYMENT - SIDEWALKS

A. Sidewalks shall be measured for payment by the square foot complete, in place, including stone base, formwork and finishing.

B. When provided for on the bid form, sidewalks shall be paid for at the contract unit price per square foot for the various design classifications shown on the bid form. When not provided for on the bid form, payment for sidewalks shall not be made directly, but shall be included in the payment for items with which it is associated.

4.04 MEASUREMENT AND PAYMENT - BASE MATERIAL

A. Base material shall be measured for payment by the square foot, in place.

B. When not provided for on the bid form, payment for granular base used shall not be made directly, but shall be included in the payment for the items in which it is associated.

4.05 MEASUREMENT AND PAYMENT - CURBS AND GUTTERS

A. Curbs, gutters and combination curbs and gutters shall be measured for payment by the linear foot, complete in place including base, formwork and finishing.

B. When provided for on the bid form, combination curbs and gutters shall be paid for at the contract unit price per linear foot for the various design classifications shown on the bid form. When not provided for on the bid form, payment for curbs and gutters shall not be made directly, but shall be included in the payment for items with which it is associated.

4.06 MEASUREMENT AND PAYMENT - SIDEWALK REMOVAL

A. Measurement for sidewalk removal and disposal shall be done on a square foot basis, complete and properly disposed of.

B. When provided for on the bid form, sidewalk removal shall be paid for at the

contract unit price per square foot.

4.07 MEASUREMENT AND PAYMENT - TREE GRATES

A. When tree grates and frames are provided by the City of Kingsport for the contractor to install, payment shall be made for each unit installed by the contractor, complete and in place.

B. When tree grates and frames are not provided by the City of Kingsport, payment shall be made for each unit installed by the contractor, complete and in place.

4.08 MEASUREMENT AND PAYMENT - BRICK PAVERS

A. Brick pavers shall be measured for payment by the square foot in place, completed, and approved.

B. When provided for on the bid form, brick pavers shall be paid for at the contract unit price per square foot for the various design classifications shown on the bid form. When not provided for on the bid form, payment for brick pavers shall not be made directly, but shall be included in the payment for items with which it is associated.

4.09 MEASUREMENT AND PAYMENT - UNDERGROUND ELECTRICAL CONDUIT

A. Rigid underground non-metallic electrical conduit shall be measured for payment by the lineal foot of pipe installed, completed in place.

B. When provided for on the bid form, conduit shall be paid for at the contract unit price per linear foot. When not provided for on the bid form, payment for conduit shall not be made directly, but shall be included in the payment for items with which it is associated.

END OF SECTION

SECTION 32 17 23

PAVEMENT MARKING

PART 1 GENERAL

1.01 WORK INCLUDED

A. Marking of pavement including surface preparation and painting on bituminous or concrete surfaces.

1.02 ACCEPTANCE PROCEDURE

A. Typical sample analysis

B. Certification that paint meets requirements

PART 2 PRODUCTS

2.01 READY MIXED PAINT

A. White or Yellow, as shown on drawings.

B. Alkyd resin, Type F traffic paint.

C. Drying time: 3 - 5 minutes when heated to application temperature.

D. Application temperature - 120° to 130° F.

E. Conform to AASHTO M-248, Type I, II, or III.

F. Each paint container shall be labeled showing details of paint, application procedure and date of manufacture.

PART 3 EXECUTION

3.01 APPLICATION

A. Perform pavement marking in accordance with the "Manual on Uniform Traffic Control Devices for Streets and Highways", published by FHWA.

B. Apply marking in strict accordance with the manufacturers recommendations.

C. Mark pavement in close conformity to the lines, dimensions, patterns, locations and details shown on the drawings or established by the Engineer of Record.

3.02 MEASUREMENT AND PAYMENT - PAVEMENT MARKING

A. Pavement marking shall be measured for payment by the linear foot of pavement marked and accepted including surface preparation and paint.

B. When provided for on the Bid Form, pavement marking as above stipulated shall be paid for at the Contract unit price per linear foot for marking of the various types and widths shown on the Bid Form. When not provided for on the Bid Form, payment for pavement marking shall not be made directly, but shall be included in the payment for the items with which it is associated.

END OF SECTION

SECTION 32 31 13

CHAIN LINK FENCES AND GATES

PART 1 GENERAL

1.01 WORK INCLUDED

A. Fence fabric and parts

B. Excavation for post bases

C. Concrete anchorage

D. Gates and hardware

1.02 RELATED WORK

A. Specified elsewhere:

1. Section 03 30 00: Concrete Work
2. Section 31 22 00: Grading and Excavating

PART 2 PRODUCTS

2.01 FABRIC

A. No. 9 Gauge, chain link open hearth steel wire, hot-dipped galvanized after weaving with a minimum coating of 1.2 ounces of zinc per sq. ft. woven in a 2" diamond mesh. Top and bottom selvage to be twisted and barbed, unless otherwise specified or directed by the Engineer.

2.02 POSTS

A. Line Posts: 2 1/2" O.D. schedule 40, hot-dipped galvanized steel pipe meeting ASTM A-120 and weighing 3.65 pounds per foot

B. Top Rail: 1 5/8" O.D hot-dipped galvanized steel pipe weighing 2.27 pounds per foot meeting ASTM A-120.

C. End and Corner Posts: 3" O.D. schedule 40 hot-dipped galvanized steel pipe meeting ASTM A-120 and weighing 5.79 pounds per foot.

D. Braces: meet the requirements for top rails as shown above.

2.03 GATES

A. Fabric for Gates: same as for adjacent fence and meeting the requirements of Article 2.01.

B. Posts: Schedule 40 hot-dipped galvanized steel pipe meeting ASTM A-120 O.D. dependent on gate leaf size, as follows:

1. Gate leaf 8 ft. or less: 3 inches
2. Gate leaf greater than 8' but less than 12': 4 inches
3. Gate leaf greater than 12' but less than 18': 6 5/8
4. Gate leaf greater than 18': 8 5/8 inches

C. Framing for Gates: 2" O.D. Schedule 40 hot-dipped galvanized steel pipe meeting ASTM A-120 and weighing 2.72 lbs. per ft. and horizontal center brace of 1 5/8" O.D. meeting same.

2.04 HARDWARE AND FITTINGS

A. Galvanized steel.

PART 3 EXECUTION

3.01 INSTALLATION

A. Install line posts, corner posts, top rails, fabric and gates, to provide a rigid structure for fence of height as shown on the drawings.

B. Use manufacturer's standard fittings, fasteners and hardware.

C. Maximum Post Spacing: CLFMA standard.

D. Install line, corner and terminal posts plumb and set in Class "B" concrete as specified in Section 03 30 00.

E. Set post to within 6 inches from concrete footing bottom.

F. Position fabric bottom 2 inches above finished grade with tension wire stretched taut between posts.

G. Pass top rail through line post to form continuous bracing.

H. Install center and bottom brace rail on corner and gate leaves.

I. Fasten fabric to top rail, line posts, braces and bottom tension wire with wire ties on 15” centers, maximum.

J. Attach fabric to end, corner, and gate posts with tension bars and clips.

K. Stretch fabric between terminal posts or at 100 foot intervals, whichever is least.

L. Install gates using fabric to match fence with 3 hinges per leaf, latch and catches.

3.02 MEASUREMENT AND PAYMENT

A. Chain link fence shall be measured for payment by the linear foot installed and accepted including fittings, hardware, and gates.

B. When provided for on the Bid form, chain link fence as above stipulated shall be paid for at the Contract unit price per linear foot for the various classifications shown on the Bid Form. When not provided for on the Bid Form, payment for chain link fence and gates shall not be made directly, but shall be included in the payment for the items with which it is associated.

END OF SECTION

SECTION 32 91 19

TOPSOIL

PART 1 GENERAL

1.01 WORK INCLUDED

A. Placement of selected topsoil on a prepared foundation, where required.

1.02 RELATED WORK

A. Specified elsewhere:

1. Section 03 30 00: Concrete Work
2. Section 31 11 00: Clearing and Grubbing
3. Section 31 22 00: Grading and Excavating
4. Section 31 25 13: Soil and Erosion Control
5. Section 32 92 19: Lawn and Grass Landscaping, Temporary Seeding
6. Section 32 92 20: Lawn and Grass Landscaping, Permanent Seeding
7. Section 32 92 23: Sodding

PART 2 PRODUCTS

2.01 DESCRIPTION

A. Topsoil shall consist of a soil conforming to the requirements of these specifications, obtained from locations indicated on the plans or approved by the Engineer of Record, and placed in conformity with the provisions and at locations specified.

B. Suitable topsoil which has been stripped off of excavation and embankment areas of roadway construction projects shall be stockpiled as directed by the Engineer of Record and later used before additional topsoil is hauled to the work site. Unsuitable material shall not be included in these stockpiles and shall be wasted as directed by the Engineer of Record.

2.02 MATERIALS

A. Topsoil shall consist of the natural loam, sandy loam, sill loam, or clay loam humus-bearing solid adapted to the sustenance of plant life, and such topsoil shall be neither excessively acid or alkaline.

B. Topsoil shall be free from foreign material such as hard pan, stones larger than one inch diameter, concrete, cinders, brick asphalt, or other undesirable materials. It shall also be reasonably free from weeds and objectionable plant material.

PART 3 EXECUTION

3.01 CONSTRUCTION REQUIREMENTS

A. All areas designated to be covered with topsoil shall be undercut or underfilled to such a degree so that when covered to the required depth with topsoil the finished work shall be in accordance with the required lines, grades, slopes, and cross sections. Such work in fill areas shall be considered subsidiary to the item of Topsoil and no additional compensation shall be made, nor shall allowance be made in the final measurement for the quantities of Grading. (See Standard Specifications for Grading.)

B. All areas from which topsoil is procured shall be cleared, if necessary, by means of mowing weeds or other vegetation to a height of approximately 6 inches and freed from any litter such as brush, rock or foreign material of objectionable size or quantity.

C. The available humus bearing soil shall then be stripped off to such depth as available, or as necessary to produce sufficient volume to cover the designated areas to the required depths, taking all practicable care to avoid incorporation of any of the underlying sterile soil therewith. The topsoil thus stripped from these areas may be stockpiled on any convenient place on the right of way so that it can be reclaimed and spread on the areas designated, or it may be placed directly on the designated areas provided they have been prepared to receive the same.

D. After the areas upon which the topsoil is to be placed have been prepared and finished to the required lines, grades, slopes, and cross section, the topsoil shall be placed and spread thereon to a uniform depth as shown on the plans or required in the contract, or if none is shown, to a depth of 3 inches.

E. All clods and lumps shall be broken down by means of harrows, discs, or other appropriate equipment to provide a uniformly textured soil. Rocks, twigs, large clods which will not break down, and other foreign material shall be removed and the entire surface shall be dressed to present a uniform appearance. Rolling is not required.

F. If the quantity of topsoil available in the right of way is insufficient, the Contractor shall make up the deficiency with topsoil from a source outside the right of way.

3.02 MEASUREMENT AND PAYMENT

A. Topsoil shall be measured for payment by the cubic yard.

B. The volume of topsoil in cubic yards, for which payment shall be made shall be computed by multiplying the area of ground actually covered by the nominal depth of topsoil as indicated on the plans or as directed by the City Engineer or his agent.

No payment shall be made for any area where the average depth in place measured in the field is significantly less than the nominal depth indicated on the plans or as directed by the City Engineer or his agent. Payment shall be made only for the yardage actually used and required in accordance with the requirements and provisions set out in these specifications or as directed by the City Engineer or his agent.

C. Topsoil not required shall not be measured for payment.

3.03 BASIS OF PAYMENT

A. When provided for on the Bid Form, this item shall be paid for at the Contract unit price per cubic yard for topsoil, complete in place, which price shall be full compensation for all work, materials, labor, maintenance, and all other incidentals necessary to complete the item, in accordance with the plans and specifications.

B. When not provided for on the Bid Form, payment for any landscaping item shall not be made directly, but shall be included in the items for which it is associated.

END OF SECTION

SECTION 32 92 19

LAWN AND GRASS LANDSCAPING
TEMPORARY SEEDING

PART 1 GENERAL

1.01 WORK INCLUDED

A. The establishment of a temporary vegetative cover on disturbed areas by seeding with appropriate rapidly growing annual plants.

B. Temporary seeding of exposed soil surfaces which are not to be graded to a final grade line for a period of 30 days to 1 year.

C. Such areas include denuded areas, soil stock piles, dikes, dams, sides of sediment/detention basins, temporary road banks, excavated utility trenches, etc.

1.02 RELATED WORK

A. Specified elsewhere:

1. Section 02 41 00: Demolition
2. Section 31 11 00: Clearing and Grubbing
3. Section 31 22 00: Grading and Excavating
4. Section 31 25 13: Soil and Erosion Control
5. Section 31 25 13: Trenching, Backfilling and Compaction
6. Section 32 91 19: Topsoil

PART 2 PRODUCTS

2.01 PLANT SELECTION

A. Select plants appropriate to the season and site conditions from the following:

TEMPORARY SEEDING PLANT MATERIALS, SEEDING RATES AND DATES						
Species	Seeding Rate Acre	Seeding Rate 1000 ft^2	3/15 to 4/30	5/1 to 8/15	8/15 to 11/1	Plant Characteristics
Oats (Avena sativae)	3 bu (100 lbs)	2 lbs	X	-	-	Use Spring oats.
Rye (Secale cereale)	3 bu (170 lbs)	3 lbs	X	-	-	Use for fall seeding, winter cover. Tolerates cold and drought.
German Millet (Setaria italica)	60 lbs	1.5 lb	-	X	-	Warm season annual. Dies at first frost.
Annual Ryegrass (Lolium multi-florum)	60 lbs	1.5 lb	X	-	X	Do not use where volunteers would be a problem later.
Weeping lovegrass (Eragrostis curvula)	3 lbs	1 oz	-	X	-	Short lived perennial; 2 - 3 years. Tolerates hot, dry slopes and acid, infertile soils.
Korean Lespedeza[c] (Lespedeza stipulacea)	20 lbs	.5 lb	X	X	-	Warm season annual legume. Tolerates acid soil.
Crimson Clover [d] (Trifolium incarnatum)	15 lbs	6 oz.	-	-	X	Cool season annual legume; begins growth in fall and dies in late spring.

Notes:
a. Not used
b. Not used
c. May be used as half the seeding rate of any spring seeding, with a grass or grain.
d. May be used as half the seeding rate of any fall seeding, with a grass or grain.
x. May be planted between these dates.
-. May not be planted between these dates.

2.02 MULCHES

ORGANIC MULCH MATERIALS AND APPLICATION RATES			
MULCHES	RATES Per Acre	Per 1000 ft^2	NOTES
Straw	1.5 - 2 tons	70 - 90 lbs	Free from weeds and coarse matter. Must be anchored. Spread with mulch blower or by hand.
Wood Fiber	1000 - 2000 lbs	25 - 50 lbs	Fibers 4mm or longer. Do not use alone in winter or during hot, dry weather. Apply as slurry.
Corn Stalks	4 - 6 tons	185 - 275 lbs	Cut or shredded in 4 - 6" lengths. Air-dried. Do not use in fine turf areas. Apply with mulch blower or by hand.
Wood Chips	4 - 6 tons	185 - 275 lbs	Free of coarse matter. Air-dried. Treat with 12lbs nitrogen per ton. Do not use in fine turf areas. Apply with mulch blower, chip handler, or by hand.
Bark Chips Shredded Bark	50 - 70 cu yds	1 - 2 cu yds	Free of coarse matter. Air-dried. Do not use in fine turf areas. Apply with mulch blower, chip handler or by hand.

PART 3 EXECUTION

3.01 SEEDING

A. Prior to seeding, install all necessary erosion control practices such as dikes, waterways, and basins, etc.

B. To control erosion on bare soil surfaces, plants must be able to germinate and grow. Seedbed preparation is essential, and the following shall be executed prior to seeding:

1. Liming: Where soils are known to be highly acid (pH 5.5 and lower), lime should be applied at the rate of two tons of pulverized agricultural limestone per acre.
2. Fertilizer: Shall be applied as 450 lbs./acre of 10-20-20 (10 lbs./1,000 sq. ft.) or equivalent. Lime and fertilizer shall be incorporated into the top 2 to 4 inches of the soil.
3. Surface Roughening: If the area has been recently loosened or disturbed, no

further roughening is required. When the area is compacted, crusted, or hardened, the soil surface shall be loosened by discing, raking, harrowing, or other acceptable means.

4. Tracking: Tracking with bulldozer cleats is most effective on sandy soils. This practice often causes undue compaction of the soil surface, especially in clayey soils, and does not aid plant growth as effectively as other methods of surface roughening.

3.02 SEEDING

A. Seed shall be evenly applied with a cyclone seeder, drill, cultipacker seeder or hydroseeder. Small grains shall be planted no more than one inch deep. Grasses and legumes shall be planted no more than 1/4 inch deep.

3.03 MULCHING

A. Seedings made in fall for winter cover shall be mulched, except that hydromulches (wood fiber) shall not be considered adequate.

B. At other times of the year, seedings made on slopes in excess of 4:1, or on adverse soil conditions, or during excessively hot or dry weather, shall be mulched.

C. Seedings made during optimum spring and summer seeding dates, with favorable soil and site conditions, shall not require mulch.

3.04 RE-SEEDING

A. Areas which fail to establish vegetative cover adequate to prevent rill erosion shall be re-seeded as soon as such areas are identified.

3.05 MEASUREMENT AND PAYMENT

A. Temporary seeding with mulch, and temporary seeding without mulch shall not be measured for payment except to determine compliance with the plans and these specifications, including fertilizing, mulching, and watering as required.

B. When provided for on the Bid Form, payment for temporary seeding stipulated above shall be by the contract unit price for the various classifications shown on the Bid Form.

1. Temporary seeding with mulch: Lump Sum
2. Temporary seeding without mulch: Lump Sum

a. When not provided for on the Bid Form, payment for any landscaping item shall not be made directly, but shall be included in the items with which it is associated.

END OF SECTION

SECTION 32 92 20

LAWN AND GRASS LANDSCAPING
PERMANENT SEEDING

PART 1 GENERAL

1.01 WORK INCLUDED

A. Preparation of landscape area including loosening, pulverizing and fertilizing.

B. Placement of seed, sprigging, sod and topsoil including mulch, where required.

C. Watering of landscaping.

1.02 RELATED WORK

A. Specified elsewhere:

1. Section 02 41 00: Demolition
2. Section 31 11 00: Clearing and Grubbing
3. Section 31 22 00: Grading and Excavating
4. Section 31 25 13: Soil and Erosion Control
5. Section 31 25 13: Trenching, Backfilling and Compaction
6. Section 32 91 19: Topsoil
7. Section 32 92 23: Sodding

PART 2 PRODUCTS

2.01 SEED MATERIALS

A. Certified seed shall be used for all permanent seeding whenever possible. Certified seed is inspected by the Tennessee Crop Improvements Association of the certifying agency in other states. The seed must meet published standards and bear an official "Certified Seed" label.

B. Legume seed - Legume seed should be inoculated with the inoculants appropriate to the species. Seed of lespedezas, crown vetch, and clovers should be scarified to promote uniform germination.

C. Apply seed uniformly with a cyclone seeder, drill, cultipacker seeder, or hydroseeder on a firm, friable seedbed. Maximum seeding depth should be 1/4 inch.

D. Hydroseeding - To avoid seed damage, when a machinery breakdown of 30 minutes to 2 hours occurs, 50% more seed shall be added to the tank, based on the proportion

of the slurry remaining in the tank. Beyond 2 hours, a full rate of new seed shall be required.

1. Often hydroseeding contractors prefer not to apply lime in their rigs as it is abrasive. In inaccessible areas, lime may have to be applied in pelletized or liquid form, separately. Rates of wood filler should be at least 2,000 lbs. per acre. Surface roughening is particularly important when hydroseeding, since a roughened slope provides some natural coverage of lime, fertilizer, and seed.

E. Legume inoculants should be applied at four times the recommended rate when inoculant is included in the hydroseeder slurry.

2.02 SEED QUALITY CRITERIA

A. Where certified seed is not available, the minimum requirements for grass and legume seed used in vegetative establishment shall be as follows:

1. All seed shall be labeled to show that it meets the requirements of the State Seed Law.
2. All seed shall be subject to re-testing by a recognized seed laboratory.
3. All seed used shall have been tested within the 6 months immediately preceding the date of sowing.
4. Inoculant - The inoculant for treating legume seed in the seed mixtures shall be a pure culture of nitrogen-fixing bacteria prepared for the species. Inoculants shall not be used later than the date indicated on the container. Twice the supplier's recommended rate of inoculant shall be used on dry seeding; four times the recommended rate if hydroseeded.

5. The quality of the seed used shall be shown on the bag tags to conform to the guidelines in the following table:

	Minimum Seed Purity %	Maximum Germination %
LEGUMES		
Crownvetch	95	65
Lespedeza, Korean	97	85
Lespedeza, Sericea	98	85
GRASSES		
Bluegrass, Kentucky	80	85
Fescue, Red	97	80
Fescue, Tall(Ky-31)	97	85
Redtop	90	85
Reed Canary grass	96	80
Ryegrass	98	85
Weeping Lovegrass	95	87
OTHER ANNUALS		
German Millet	99	80
Oats	98	80
Rye	98	85

6. Seed containing prohibited or restricted noxious weeds shall not be accepted.
7. Seed should not contain in excess of 0.5% weed seed.
8. To calculate percent pure live seed, multiply germination times purity and divide by 100.

   a. Example: Ky-31 Tall Fescue with a germination of 8% and a purity of 97%; 97 x 85 = 8245. 8245/100 = 82.45% pure live seed.

2.03 SELECTION OF PLANT MATERIALS AND MIXTURES

A. Land Use: A prime consideration in selecting which plants to establish is the intended use of the land. All of these uses-residential, industrial, commercial, recreational-can be separated into two categories: High-maintenance and low-maintenance.

B. High-maintenance areas shall be mowed frequently, limed and fertilized regularly and shall either receive intense use (e.g., athletics) or require maintaining to an aesthetic standard (home lawns). Grasses used for these situations must be fine-leaved and attractive in appearance, able to form tight sod, and be long-lived perennials. They must be well adapted to the geographic area where they are planted, because constant mowing puts turf under great stress. Sites where high-

maintenance vegetative cover is desirable include homes, industrial parks, schools, churches, and some recreational areas.

C. Low-maintenance areas may be mowed infrequently or not at all; lime and fertilizer may not be applied on a regular basis; the areas will not be subjected to intense use, nor required to have a uniform appearance. These plants must be able to persist with little maintenance over long periods of time. Grass and legume mixtures are favored for these sites because legumes are capable of fixing nitrogen from the air for their own use, and the use of the plants around them. Such mixed stands are better able to withstand adverse conditions. Sites which would be suitable for low-maintenance vegetation include steep slopes, stream or channel banks, some commercial properties, and "utility turf" areas such as road banks.

2.04 SEEDING MIXTURES FOR VARIOUS SITE CONDITIONS

Site Conditions	Seeding Mixtures	Rates Per Acre In lbs	Rates Per 1000 ft^2 In lbs	3/15 to 5/1	5/1 to 8/15	08/15 to 10/1
High Maintenance Lawns	Kentucky bluegrass - a blend of 4 or more varieties - 100% (no variety shall be more than 30% of total mixture). Note: Up to 50% of the mixture may be red fescue, where lawns are shaded.	140	3	X	No	X
High Maintenance Lawns	Tall fescue – Blend of 3 or more – 100%	200	6	X	No	X
Low Maintenance Lawns	Tall fescue 50% Landio clover 10% Red Clover 10% Korean lespedeza 15% Annual ryegrass 15%	80	2	X	(a,b) X	X
Low Maintenance Lawns	Tall fescue 50% Sericea Lespedeza 30% Annual ryegrass 15% Redtop 5%	70	1.5	X	(a) X	X
Slopes	Crown Vetch 50% Perennial ryegrass 40% Redtop 10%	40	1	X	No	X
Slopes	Flat pea 50% Tall fescue 50%	80	2	X	No	X
Droughty Areas	Tall fescue 65% Reed canary grass 20% Annual ryegrass 15%	80	2	X	No	X
Droughty Areas	Tall fescue 60% Serices lespedeza 30% Redtop 10%	70	1.5	X	(a) X	X

a) May 15, use 10 lbs./A German millet or 2 lbs./A weeping lovegrass in place of annual ryegrass or redtop.
b) May 15, omit Korean lespedeza and increase red clover to 20% of mixture.

2.05 LIME AND FERTILIZER

A. Lime and fertilizer needs should be determined by silt tests.

B Under unusual conditions where it is not possible to obtain a soil test, the following soil amendments shall be applied:

1. Lime: 3 tons/acre pulverized agricultural limestone (140 lbs./100 ft^2).
2. Fertilizer:

   a. Mixed grasses and legumes: 1900 lbs./acre 5-20-10 (25 lbs/1000 ft^2).

   b. Legume stands only: 1000 lbs./acre 5-20-10 (25 lbs./1000 ft^2).

   c. Grass stand only: 1000 lbs./acre 5-20-10 and 300 lbs. of 38-0-0 in spring (7 lbs/100 ft^2). 1000 lbs./acre 10-20-10 and 300 lbs. of 38-0-0 in fall (7 lbs./1000 ft^2)

   d. Other fertilizer formulations may be used, provided they can supply the same amounts and proportions of plant nutrients.

C. Incorporation: Lime and fertilizer shall be incorporated into the top 4-6 inches of the soil by discing or other means. When applying lime and fertilizer with a hydroseeder, apply to a rough, loose surface.

2.06 MULCHING

A. All permanent seeding must be mulched immediately upon completion of seed application, with organic mulch as follows:

Organic Mulch Materials and Application Rates			
Mulches	Rates per Acre	Rates per 1000 ft^2	Notes
Straw	1.5 - 2 tons	70 - 90 lbs	Free from weeds and coarse matter. Spread with mulch blower by hand
Wood Fiber	1000 - 2000 lbs	25 - 50 lbs	Fibers 4mm or longer. Do not use alone in water or during hot, dry weather. Apply as slurry.
Corn Stalks	4 - 6 tons	185 - 275 lbs	Cut or shredded in 4 - 6" lengths. Air-dried. Do not use in fine turf areas. Apply with mulch blower or by hand.
Wood Chips	4 - 6 tons	185 - 275 lbs	Free of coarse matter. Air-dried. Treat with 12 lbs nitrogen per ton. Do not use in fine turf areas. Apply with mulch blower, chip handler, or by hand.
Bark Chips Shredded Bark	50 - 70 cu yds	1 - 2 cu yds	Free of coarse matter. Air-dried. Do not use in fine turf areas. Apply with mulch blower, chip handler or by hand.

B. Mulch materials shall be spread uniformly, by hand or machine.

C. When spreading straw mulch by hand, divide the area to be mulched into approximately 1,000 sq.ft sections and place 70-90 lbs. (1-1/2 to 2 bales) of straw in each section to facilitate uniform distribution.

D. Straw mulch must be anchored immediately after spreading to prevent windblow. Other organic mulches listed in The Materials and Application Rates Table do not require anchoring. The following methods of anchoring straw may be used:

1. Mulch anchoring tool: This is a tractor-drawn implement designed to punch mulch into the soil surface. This method provides maximum erosion control with straw. It is limited to use on slopes no steeper than 3:1, where equipment can operate safely. Machinery shall be operated on the contour.
2. Liquid mulch binders: Application of liquid mulch binders and tackifiers

should be heaviest at edges of areas and at crests of ridges and banks, to prevent windblow. The remainder of the area should have binder applied uniformly. Binders may be applied after mulch is spread or may be sprayed into the mulch as it is being blown onto the soil. Applying straw and binder together is the most effective method.

The following types of binders may be used:

a. Asphalt--Any type of asphalt thin enough to be blown from spray equipment is satisfactory. Recommended for use are rapid curing (RC-70, RC-250, RC-800), medium curing (MC-250, MC-800) and emulsified asphalt (SS-1, CSS-1, CMS-2, MS-2, RS-1, RS-2, CRS-1, and CRS-2). Apply asphalt at 0.10 gallon per square yard (10 gal./1000 ft. 480 gal./acre). Do not use heavier applications as it may cause the straw to "perch" over rills. All asphalt designations are from the Asphalt Institute Specifications.

b. Synthetic binders--Chemical binders such as Petroset, Terratack and Aerospray may be used as recommended by the manufacturer to anchor mulch. These are expensive and therefore usually used in small areas or in residential areas where asphalt may be a problem. (Use of trade names does not constitute an endorsement).

3. Mulch nettings--lightweight plastic, cotton, or paper nets may be stapled over the according to manufacturer's recommendations (See NETS AND MATS, below),

4. Peg and twine--Because it is labor-intensive, this method is feasible only in small areas where other methods cannot be used. Drive 8-to-10 inch wooden pegs to within 3 inches of the soil surface, every 4 feet in all directions. Stakes may be driven before or after straw is spread. Secure mulch by stretching twine between pegs in a crisscross-within-a-square pattern. Turn twine 2 or more times around each peg.

2.07 JUTE MESH

A. Excelsior blankets are considered protective mulches and may be used alone on erodible soils and during all times of year.

B. Jute net shall be heavy, uniform cloth woven of single jute yarn, which if 36 to 48 inches wide shall weigh an average of 1.2 pounds per linear yard.

C. Other products designed to control erosion shall conform to manufacturer’s specification and should be applied in accordance with manufacturer's instructions provided those instructions are at least as stringent as this specification. Examples of these products are Erosionet, Holdgro, Weedchek, and Curlex. (Use of trade

names does not indicate endorsement of products). In no case shall these products cover less than 30% of the soil surface.

2.08 STAPLES

A. Staples shall be made of plain iron wire, No. 8 gauge or heavier, and shall be 6 inches or more in length.

2.09 WATER

A. Free from harmful organisms or other objectionable material.

PART 3 EXECUTION

3.01 SEEDBED REQUIREMENTS

A. Vegetation should not be established on slopes that are unsuitable because of inappropriate soil texture, poor internal structure or internal drainage, volume of overland flow, or excessive steepness, until measures have been taken to correct these problems.

B. To maintain a good stand of vegetation, the soil must meet certain minimum requirements as a growth medium. The existing soil must have these criteria:

1. Enough fine-grained material to maintain adequate moisture and nutrient supply
2. Sufficient pore space to permit root penetration. A bulk density of 1.2 to 1.5 indicates that sufficient pore space is present. A fine granular or crumb-like structure is also favorable.
3. Sufficient depth of soil to provide an adequate root zone. The depth to rock or impermeable layers such as hardpans shall be 12 inches or more, except on slopes steeper than 2:1 where the addition of soil is not feasible.
4. A favorable pH range for plant growth. If the soil acid that a pH range of 6.0-7.0 cannot be attained by addition of pH-modifying materials, then the soil is considered an unsuitable environment for plant roots.
5. Freedom from toxic amounts of materials harmful to plant growth.
6. Freedom from excessive quantities of roots, branches, large stones, large clods of earth, or trash of any kind. Clods and stones may be left on slopes steeper than 3:1 if they are to be hydroseeded.

C. If any of the above criteria cannot be met, i.e., if the existing soil is too coarse, dense, shallow. acid, or contaminated to foster vegetation, then topsoil shall be applied in accordance with Section 32 91 19.

3.02 SEEDING

A. Topsoil is to be placed as needed to provide a minimum of 4 inches of topsoil up to the finished surface of the area to be seeded, unless otherwise directed by the City Engineer or his agent. Whenever reasonably possible, the original topsoil is to be reused in order to minimize the amount of topsoil which must be hauled in. Both stockpiled topsoil from the original ground surface and hauled in topsoil shall be placed such as to restore the surface of the earth and the soil profile to its former condition as nearly as is reasonably possible.

B. Scarify, disc, harrow, rake, or otherwise work each area to be of 4 seeded until it has been loosened and pulverized to a depth of 4 to 6 inches or as directed by the City Engineer or his agent

C. Uniformly incorporate fertilizer into the soil for a depth of approximately 4 - 6 inches at the rate specified in paragraph 2.05 of this specification.

D. Fertilizer needs not be incorporated in the soil as specified above when mixed with seed in water and applied with power sprayer equipment (hydroseeder).

E. Sow seed of the specified group as soon as preparation of the seedbed has been completed.

F. Sow uniformly by means of a rotary seeder, hydraulic equipment, or other satisfactory means at the rate specified in paragraph 2.04.

G. Do not perform seeding during windy weather, or when the ground surface is frozen, wet or otherwise non-tillable. No seeding shall be performed during November through February unless otherwise permitted.

H. When specified, provide seeding with mulch:

1. Spread organic mulch evenly over the seeded area.
2. Organic straw mulch shall be held in place by use of a mulch binder.
3. Cover bridges, guardrails, signs, and appurtenances if the mulch binder is applied.

3.03 SPRIGGING

A. Lightly incorporate fertilizer into the soil for depth 1-1/2 inches at the rate of:

1. 20 lbs. per 1000 square feet for grade 10-10-10 or equivalent.

B. Perform sprigging during September-November or April-May and only when the soil is in tillable or workable condition.

C. Do not set crowns during windy weather or when the ground surface is frozen.

D. Set crowns as soon as preparation of the sprig bed has been completed.

E. Set crowns at the rate of three sprigs per square yard by means of a tree-planting bar or equal.

F. When specified, perform mulching before sprigging:

1. Spread mulch material evenly over the area to be planted at the rate of 100 lbs. per 1000 square feet. This rate may be varied by the City Engineer or his agent depending upon the texture and condition of the mulch material and the ground surface.
2. Cover with a uniform layer of mulch so that 20-25% of the ground is visible. The mulch shall be loose enough to allow sunlight to penetrate and air to circulate slowly, but thick enough to partially shade the ground and to reduce erosion.
3. Hold the mulch in place with mulch binders applied at the rate directed by the City Engineer or his agent, not to exceed 0.1 gallons per square yard, as required to hold the mulch in place.

3.04 NETS AND MATS

A. Nets may be used alone on level areas, on slopes no steeper than 3:1, waterways, and in STORMWATER CONVEYANCE CHANNELS.

B. When mulching is done in late fall or during June, July and August, or where soil is highly erodible, net should only be used in conjunction with an organic much such as straw.

C. When net and organic mulch are used together, the net should be installed over the mulch except when the mulch is wood fiber. Wood fiber may be sprayed on top of the installed net.

D. Prior to installation:

1. Shape and grade as require the waterway, channel, slope or the area to be protected.
2. Remove all rocks, clods, or debris larger than 2 inches in diameter which prevent contact between the net and the soil surface.
3. When open-weave nets are used, lime, fertilizer and seed may be applied either before or after laying the net. When excelsior matting is used, they must be applied before the mat is laid.

E. Laying the Net:

1. Start laying net from top of channel or top of slope and unroll down grade.
2. Allow to lay loosely on soil--do not stretch.
3. To secure net: Upslope ends of net should be buried in a slot or trench no less than 6 inches deep. Tamp earth firmly over net. Staple the net every 12 inches across the top end.
4. Staples shall be placed down the center of net strips at 3-foot intervals. DO NOT STRETCH net when applying staples.
5. Joining strips: insert new roll of net in trench, as with upslope ends of net. Overlap the end of the previous roll 18 inches, turn under 6 inches, and staple across end of roll just below anchor slot and at the end of the turned-under net every 12 inches.
6. At bottom of slopes: Lead net out onto a level area before anchoring. Turn ends under 6 inches, and staple across end every 12 inches.
7. Check slots: On highly erodible soils and on slopes steeper than 4:1, erosion check slots should be made every 15 feet. Insert a fold of net into a 6-inch and tamp firmly. Staple at 12-inch intervals across the downstream portion of the net.
8. Rolling: After installation, stapling, and seeding, net should be rolled to insure firm contact between net and soil.

F. Maintenance

All mulches should be inspected periodically, in particular after rainstorm, to check for rill erosion. Where erosion is observed, additional mulch should be applied. Net should be inspected after rainstorms for dislocation or failure. If washouts or breakage occur, re-install net as necessary after repairing damage to the slop. Inspections should take palace up until grasses are firmly established. Where mulch is used in conjunction with ornamental plantings, inspect periodically throughout the year to determine if mulch is maintaining coverage of the soil surface; repair as needed.

3.05 MAINTENANCE OF NEW SEEDINGS

A. New seedings should be supplied with adequate moisture. Supply water as needed, especially late in the season, in abnormally hot or dry weather, or on adverse sites. Water application rates should be controlled to prevent runoff. Inadequate amounts of water may be more harmful than no water.

B. Re-seeding: Inspect seeded areas for failure and make necessary repairs and reseedings with in the same season, if possible.

1. If vegetative cover is inadequate to prevent rill erosion, overseed and fertilize in accordance with soil test results.
2. If a stand has less than 40% cover, re-evaluate choice of plant materials and

quantities of lime and fertilizer. Re-establish the stand following seedbed preparation and seeding recommendations, omitting lime and fertilizer in the absence of soil test results. If vegetation has failed to grow, soil must be tested to determine if acidity or nutrient imbalances are responsible.

C. Fertilization: Seedlings should be fertilized one year after planting to insure proper stand density.

1. To established all grass stand, apply 500 lbs/acre of 10-20-10 (12 lbs./1000 ft^2) between August 15 and November 15. (The first fall following seeding)
2. To legume-and-grass stands or pure legume stands, apply 500 lbs./acre of 0-20-20 (12 lbs./1000 $ft.^2$) in early May or between August 15 - October 15.

D. Generally, a stand of vegetation cannot be determined to be fully established until soil cover has been maintained for one full year from planting. Disturbed areas which are to be stabilized with permanent vegetation must be seeded or planted within 15 days after final grade is reached unless temporary stabilization is applied.

3.06 MEASUREMENT AND PAYMENT

A. Seeding with mulch, and seeding without mulch shall not be measured for payment except to determine compliance with the Plans and these Specification, including fertilizing, mulching and watering as required. Sprigging shall be measured by the City Engineer or his agent for payment on the basis of area in place, for work performed and accepted including fertilizing, mulching, and watering as required.

B. When provided for on the Bid Form, payment for landscaping as stipulated above shall be by the contract unit price for the various classifications shown on the Bid Form.

1. Seeding with mulch: Lump Sum
2. Seeding without mulch: Lump Sum
3. Sprigging: Square Yard

a. When not provided for on the Bid Form, payment for any landscaping item shall not be made directly, but shall be included in the items with which it is associated.

END OF SECTION

SECTION 32 92 23

SODDING

PART 1 GENERAL

1.01 WORK INCLUDED

A. Placement of selected sod on a prepared foundation, where required.

1.02 RELATED WORK

A. Specified elsewhere:

1. Section 31 11 00: Clearing and Grubbing
2. Section 31 22 00: Grading and Excavating
3. Section 31 23 33: Trenching, Backfilling and Compaction
4. Section 31 25 13: Soil and Erosion Control
5. Section 32 91 19: Topsoil
6. Section 32 92 19: Lawn and Grass Landscaping, Temporary Seeding
7. Section 32 92 20: Lawn and Grass Landscaping, Permanent Seeding

PART 2 PRODUCTS

2.01 DESCRIPTION

A. Sodding shall consist of furnishing and placing sod at all locations shown on the Plans or where directed by the City Engineer or his agent, and in conformity with these specifications.

2.02 MATERIALS

A. Sod shall consist of a live, dense, well rooted growth permanent grasses, free of weeds and weedy grasses. All sod shall be cleanly cut in strips having a reasonably uniform thickness of not less than 2 1/2 inches, a reasonable uniform width of not less than 8 inches, and a length of not less than 12 inches. Sod shall be Kentucky 31 Fescue, Fine Tall Fescue, Bluegrass, or Bermuda grass.

B. Fertilizer shall be Grade 15-15-15 commercial grade and shall conform to local, state, and federal fertilizer laws. The fertilizer shall be furnished in standard containers with the name, weight and guaranteed analysis of the contents clearly labeled.

C. Limestone shall be ground limestone containing not less than 85 % of total carbonates, and shall be ground to such fineness that 85 % shall pass through a No. 10 mesh sieve.

D. Ammonium Nitrate shall be standard commercial product and have a minimum of 33 % nitrogen.

PART 3 EXECUTION

3.01 CONSTRUCTION METHODS

A. Sod shall be set or reset only when the soil is moist and favorable to growth. Setting shall be as follows unless permission is granted by the City Engineer or his agent.

1. Kentucky 31 Fescue – Any time weather permits
2. Bermuda grass -- April 15 thru August 14
3. Bluegrass - March 1 thru April 30; September 1 thru October 31

B. The area to be sodded shall be constructed to the lines and grades indicated on the plans or as directed by the City Engineer or his agent, and the surface loosened to a depth of not less than 3 inches with a rake or other device. If necessary, it shall be sprinkled until saturated at least one inch in depth and kept moist until the sod is placed thereon. Immediately before placing the sod, the fertilizer shall be uniformly applied at the rate of 8 pounds of Grade 15-15-15, or equivalent, per 1,000 sq.ft. Agricultural limestone shall be applied at the rate of 75 pounds per 1,000 sq.ft.

C. The sod shall be placed on the prepared surface with the edges in close contact, and, as far as possible, in a position to break joints. Sod strips should be laid across the slope - not up and down. The sod shall be fitted tightly in the space placed and shall be pounded into place. The entire area should be thoroughly covered with sod.

D. Sod shall be placed as soon as practical after removal from the point or origin, and shall be kept moist in the interim. Immediately after placing, it shall be thoroughly wetted and rolled with a satisfactory roller.

E. On steep slopes and channels sod shall be fastened to the ground with wire staples or wood pegs. Where surface water cannot be diverted from flowing over the face of slopes, install a strip of heavy jute or plastic netting and fasten tight along the crown or top of the slope for extra protection against lifting and undercutting of sod.

F. The sod shall be watered as directed by the City Engineer or his agent for a period of 2 weeks after which ammonium nitrate shall be applied at the rate of 2 pounds per 1,000 sq. ft. and the sod given a final watering.

G. The Contractor shall not allow any equipment or material placed on any planted area, and shall erect suitable barricades and guards to prevent his equipment, labor or the public from traveling on or over any area planted with sod.

H. It shall be the obligation of the Contractor to secure a satisfactory growth of grass

before final acceptance of the project.

3.02 MEASUREMENT AND PAYMENT

A. Sod shall be measured for payment by the square yard from surface measurements.

3.03 BASIS OF PAYMENT

A. When provided for on the Bid Form, this item shall be paid for at the Contract unit price per square yard for sodding.

B. This unit price shall be full compensation for completing sodding as outlined in the plans and these specifications including the cost of excavation and disposal of material, fertilizer, lime, ammonium nitrate, water, labor, equipment, and all other incidentals.

C. When not provided for on the Bid Form, payment for any landscaping item shall not be made directly, but shall be included in the items for which it is associated.

END OF SECTION

SECTION 33 01 30

CURED-IN-PLACE PIPE (CIPP)

PART 1 GENERAL

1.01 INTENT

A. It is the intent of this specification to provide for the reconstruction of existing pipelines and conduits by the installation of cured-in-place pipe (CIPP).

B. Scope: All pipe sections to be rehabilitated with CIPP shall be from manhole to manhole, and include all service laterals to the property line. New clean outs shall be installed at the property lines.

1.02 REFERENCES

A. This specification references American Society for Testing and Materials (ASTM) and National Association of Sewer Service Companies (NASSCO) standards which are made part hereof by such reference, and shall be the latest edition and revision thereof. If there is conflict between these standards and this specification, this specification shall govern.

1.03 QUALITY ASSURANCE

A. For a product to be considered, a minimum of 250,000 feet and 1,000 line sections of successful wastewater collection system installations in the U.S. must be documented. In addition, the product shall have been in service within the wastewater collection system of a town or county within the State of Tennessee for a minimum of three years.

1.04 MANUFACTURE

A. CIPP shall be manufactured by Cure All, Inliner USA, Insituform or equal as approved by the Engineer of Record, modified to meet these specifications. Installer shall meet all listed requirements and be approved by manufacturer. Installer shall be Insituform Technologies, Reynolds, Inc., W.L. Hailey or equal as approved by the Engineer of Record. Only one manufacturer and installer are allowed.

1.05 SUBMITTALS

A. Submit shop drawings in accordance with Section 01 33 00.

B. Submit all information, calculations, documentation and certificates listed, plus:

1. Recommend installation procedures.

2. Schedule and installation plan.
3. Installer and manufacturer experience.
4. Design calculations.
5. Material properties, including all MSDS.

PART 2 PRODUCTS

2.01 MATERIALS

A. The tube shall consist of one or more layers of absorbent fabric capable of carrying resin, and capable of withstanding installation pressures and curing temperatures. The tube shall be compatible with the resin system used. The tube material shall be able to stretch to fit irregular pipe sections and negotiate bends. The outside layer of the tube shall be plastic coated with a material that is compatible with the resin system used. The tube shall be fabricated to size that, when installed, fits the internal circumference and the length of the existing pipe. Allowance should be made for circumferential stretch during installation. The outside of the tube shall be marked along its full length at regular intervals not to exceed five (5) feet.

B. The resin used shall be a thermoset resin system which is compatible with the cured-in-place pipe installation. The resin shall be able to cure in the presence of water and the initiation temperature for cure shall be less than 180°F.

C. Chemical Resistance - The CIPP shall meet the minimum chemical resistance requirements listed below. CIPP samples for testing shall be of tube and resin system similar to that proposed for actual construction. It is required that CIPP samples with and without plastic coating meet these chemical testing requirements.

1. Chemical resistance tests shall be completed in accordance with Test Method D 543 with the chemical solutions shown in Table 6.1. Exposure should be for a minimum of one month at 73.4° F (23°C). During this period, the CIPP test specimens should lose no more than 20% of their initial flexural strength and flexural modulus when tested in accordance with Section VIII.

Minimum Chemical Resistance Requirements for Domestic Sanitary Sewer Applications	
Chemical Solution	Concentration, %
Nitric Acid	5
Tap Water (pH 6-9)	100
Phosphoric Acid	10
Sulfuric Acid	10
Gasoline	100
Vegetable Oil	100
Detergent	0.1
Soap	0.1

D. Long-term properties - Third party testing of a 10,000 hour external loading test, conducted in a wet environment to simulate field conditions, shall be used to verify long-term design values. A minimum of eighteen (18) restrained pipe samples shall be tested, with the results extrapolated to provide 50-year data.

E. Strain-corrosion testing - Glass fiber reinforced products shall submit strain corrosion test data performed in accordance with ASTM D3681 without failure in 18 samples when exposed to 1.0N sulfuric acid at the following strain levels for the time periods shown:

HOURS	# OF SAMPLES	MIN. STRAIN %
10	4	0.72
100	5	0.69
1,000	5	0.67
10,000	4	0.64

F. External hydrostatic pressure testing - Third party testing of external hydrostatic loading capacity of at least 10 restrained pipe samples shall be conducted to verify the enhancement factor, K.

G. Soil loading - Third party soil cell testing of the product shall be provided to demonstrate structural capacity and verify design techniques.

H. The design method used for the product must be submitted for review and approval. Physical properties used in design equations must be validated by independent testing of product samples from ten previous projects. Physical values derived from laboratory samples shall not be allowed.

I. Any product which requires bonding to the existing pipe must be installed in fully-operating pipe of at least 200 feet. This installation shall be at the cost of the Installer. The test pipe shall be chosen by the Owner or Owner's Engineer. Once installed, a minimum of five 10-foot sections shall be chosen at random and excavated. A suitable impact instrument shall be used to crack the host pipe. Complete bonding between the new pipe and the host pipe must be evident. If any areas of incomplete bonding exist, the product shall be rejected. In the case of failure, the entire test section shall be excavated, the old lined pipe removed and discarded, and a new pipe of the Design Engineer's choice shall be installed. The installer shall be responsible for the entire cost of this test regardless of the outcome.

J. The following requirements on installation shall be met by the installer:

1. An itemized list detailing the installation procedures shall be submitted. This shall include estimated times for each task, lateral reinstatement methods, the number of required excavations and any other items unique to each process.
2. Installer shall submit evidence of being trained to install the product.
3. All related ASTM standards, or any nationally recognized standards, for

installation of the product shall be submitted.

4. Detailed procedures shall be submitted for repairing this product in the event of failure or future damage. These procedures should not require specialized training and/or equipment for the Owner's maintenance crews.
5. Detailed procedures shall be submitted for future tapping of service connections into the product. The procedures should not require specialized training and/or equipment for the Owner's maintenance crews.
6. The CIPP system shall have the minimum structural properties given below:

    a. Flexural Strength, ASTM D790: 4,500 psi

    b. Flexural Modulus, ASTM D790: 250,000 psi

K. CIPP Field Samples - To verify physical properties, the manufacturer shall submit a minimum of 15 test results from previous field installations of the same resin system and tube materials as proposed for the actual installation. These test results must verify that the CIPP physical properties specified have been achieved in previous field applications.

L. The wall color of the interior pipe surface of the CIPP after installation shall not be of a dark or nonreflective nature which could inhibit proper closed circuit television inspection.

M. The bond between all CIPP layers shall be strong and uniform. All layers, after cure, shall be completely saturated with resin.

2.02 DESIGN PARAMETERS

A. The required structural CIPP wall thickness shall be based on the minimum physical properties and in accordance with the guidelines in the appendix of ASTM F1216, with the following design parameters:

1.	Design Safety Factor	=	2.0
2.	Reduction Factor for Long-Term Effects (applied to flexural modulus)	=	50% minimum
3.	Ovality	=	2%
4.	Enhancement Factor, K	=	7
5.	Internal Vacuum (if applicable)	=	N/A
6.	Groundwater Depth above invert	=	5 ft
7.	Soil Depth above crown	=	10 ft
8.	Design Condition (partially or fully deteriorated)	=	Partially

B. Any layers of the tube that are not saturated with resin prior to insertion into the existing pipe shall not be included in the structural CIPP wall thickness.

2.03 LATERALS

A. Laterals shall be inspected prior to lining with an acceptable lateral camera. If the lateral can not be lined, it shall be replaced by conventional dig and replace or pipe bursting at the price listed in the bid form.

B. Laterals shall be lined without street excavation. Lining shall be installed so that the line and laterals pass all testing requirements.

PART 3 EXECUTION

3.01 INSTALLATION

A. Cleaning and Inspection

1. All internal debris shall be removed from the original pipeline. Gravity pipes shall be cleaned with hydraulically powered equipment, high-velocity jet cleaners, or mechanically powered equipment.
2. Inspection of pipelines shall be performed by experienced Pipeline Assessment and Certification Program (PACP) certified personnel. The interior of the pipeline shall be carefully inspected to determine the location of any conditions that may prevent proper installation of the impregnated tube, such as protruding service taps, collapsed or crushed pipe, and reductions in the cross-sectional area of more than 40%. These conditions shall be noted so that they can be corrected. The original pipeline shall be cleared of these obstructions at no additional cost to the owner. If inspection reveals an obstruction, other than a protruding “hammer” tap, that cannot be removed by conventional sewer cleaning equipment, then a point repair excavation should be made to uncover and remove or repair the obstruction. Cutting of protruding taps shall be paid in accordance with Section 01 22 00.
3. If a condition exists which prevents a given section from being successfully lined, the section shall be replaced by the dig and replace method or the pipe bursting method as directed by the City Engineer or his agent at the base bid price. No additional allowance for television inspection or cleaning shall be allowed.
4. All laterals shall be inspected by a camera which can telescope to a minimum of 10' up the lateral and which can be inserted into the lateral from the main line, without the use of a clean out. All laterals shall be inspected prior to the start of the lining process. If a condition which precludes lining the lateral is observed, an open cut or pipe bursting method shall be used.
5. All inspections shall be video taped, and all tapes provided with on screen notations indicating manhole numbers, direction of travel, and footage in the pipe. One copy of each tape shall be provided to the City Engineer or his agent at least fifteen working days prior to the lining operations. Because some line sections have a large number of existing laterals which could be eliminated by TV inspection, a period of fifteen days shall be required for the

owner to review the video inspection and render a decision on which laterals will be lined or eliminated. Any issues with lining the segments shall be noted on the transmittal with each tape. Each tape shall have a clearly annotated log showing coverage, distances, defects, taps, and manholes. Post lining videos shall be recorded immediately after lining, including inspection of all lined laterals. Post lining videos shall be provided to the City Engineer or his agent prior to acceptance of lines. All inspections shall be provided to the City Engineer or his agent in PACP inspection format on CD in digital form. Any software required to review this data shall be provided at no additional cost.

B. Resin Impregnation

1. The tube shall be vacuum-impregnated with resin (wet-out) under controlled conditions. The volume of resin used shall be sufficient to fill all voids in the tube material at nominal thickness and diameter. The volume shall be adjusted by adding excess resin for the change in resin volume by polymerization and to allow for any migration of resin into the cracks and joints in the original pipe. A roller system shall be used to uniformly distribute the resin throughout the tube.
2. The Installer shall designate a location where the CIPP will be vacuum impregnated prior to installation. The Installer shall allow the owner's representative to inspect the materials and procedures used to vacuum impregnate the tube.

C. Bypassing

1. If bypassing of the flow is required around the sections of pipe, the bypass should be made by plugging the line at a point upstream of the pipe to be reconstructed and pumping the flow to a downstream point or adjacent system. The pump and bypass lines shall be of adequate capacity and size to handle the flow. Services within this reach shall be temporarily out of service.
2. Public advisory services shall be required to notify all parties whose service laterals shall be out of service and to advise against water usage until the mainline is back in service. Maximum service outage shall be six hours.

D. Installation of CIPP

1. The wet out tube shall be inserted through an existing manhole or approved access point by means of an inversion process and the application of a hydrostatic head sufficient to extend it to the next designated manhole or termination point. Alternately, the tube can be pulled into place and expanded by a water inversion process with an inflation bladder.
2. The inversion pressures necessary for proper installation shall be provided by the manufacturer prior to installation. Tube installation forces or pressures shall be limited so as not to stretch the tube longitudinally by more than 5% of

the original length.

3. Before the installation begins, the tube manufacturer shall provide the minimum pressure required to hold the tube tight against the existing conduit, and the maximum allowable pressure so as not to damage the tube. Once the installation has started, the pressure shall be maintained between the minimum and maximum pressures until the installation has been completed.
4. The existing conduit shall be dewatered for any CIPP installation that does not use an inversion method to expand the tube against the pipe wall.
5. For pull-in methods, a proofing section shall be pulled through the existing conduit prior to installation. The proofing section shall consist of the materials proposed for rehabilitation. The minimum length of the proofing section shall be 5% of the total line length and shall be of like diameter and thickness. If proofing section is damaged, point repairs shall be made to the existing conduit. The proofing process shall be repeated using a new proofing section to verify effective point repairs. Repeat proofing and point repair process until proofing results in no damage to proofing section. Installation of CIPP using pull-in methods can begin after successfully proofing the existing conduit.

E. The lubricant used shall be a nontoxic, oil-based product which has no detrimental effects on the tube or boiler and pump system, shall not support the growth of bacteria, and shall not adversely affect the fluid to be transported. Lubricant shall not be used in processes with permeable coatings.

F. Curing

1. After installation is completed, a suitable heat source and water re-circulation equipment are required to circulate heated water throughout the pipe. The equipment shall be capable of delivering hot water throughout the section to uniformly raise the water temperature above the temperature required to effect a cure of the resin. Water temperature in the line during the cure period shall be as recommended by the resin manufacturer.

    a. The heat source shall be fitted with suitable monitors to gage the temperature of the incoming and outgoing water supply. Another such gage shall be placed between the impregnated tube and the pipe invert at the termination to determine the temperatures during cure.

    b. Initial cure shall occur during temperature heat-up and is completed when exposed portions of the new pipe appear to be hard and sound and the remote temperature sensor indicates that the temperature is of a magnitude to realize an exotherm or cure in the resin. After initial cure is reached, the temperature shall be raised to the post-cure temperature recommended by the resin manufacturer. The

post-cure temperature shall be held for a period as recommended by the resin manufacturer, during which time the re-circulation of the water and cycling of the boiler to maintain the temperature continues. The curing of the CIPP must take into account the existing pipe material, the resin system, and ground conditions (temperature, moisture level, and thermal conductivity of soil).

c. Thermocouples or other approved temperature measuring devices shall be placed between the liner and the host pipe at the following locations.

1) 15 feet from start of lining.
2) 215 feet from end of lining
3) 10 feet from an intermediate manhole on linings over 400 feet.

Thermocouples shall be located at 4 or 8 o'clock, and shall be continuously monitored during the inversion process. Each thermocouple shall be connected to a continuous, digital indicator, and temperatures recorded every 30 minutes.

G. Cool-Down

1. The CIPP shall be cooled to a temperature below 100°F (38°C) before relieving the hydrostatic head. Cool-down may be accomplished by the introduction of cool water into the CIPP to replace water being drained from a small hole made in the down-stream end. Care shall be taken in the release of the static head so that a vacuum is not developed which could damage the newly installed pipe. Release rate shall be approved by the Engineer of Record.

H. Inflation Bladder Removal

1. For pulled-in place installation techniques where the inflation bladder is designed to not bond to the CIPP, all portions of the bladder material must be removed from the CIPP.

I. Workmanship

1. The finished pipe shall be continuous over the entire length of an installation run and be free of dry spots, lifts, and delaminations. If these conditions are present, remove and replace the CIPP in these areas.
2. If the CIPP does not fit tightly against the original pipe at its termination point(s), the space between the pipes shall be sealed. Method of sealing shall

be approved by the Engineer of Record.

J. Service Connections

After the new pipe has been cured in place, the existing active service connections shall be reconnected. This shall be done without excavation, and in the case of non-man entry pipes, from the interior of the pipeline by means of a television camera and a remote-control cutting device. If excavations are required, they shall be at no additional cost to the owner.

3.02 INSPECTION

A. Testing Protocol

A total of five samples shall be taken at locations approved by Engineer of Record. Each CIPP sample shall be cut from a section of cured CIPP at an intermediate manhole or at the termination point (only if no intermediate manholes are available) which has been inverted through a like diameter pipe which has been held in place by a suitable heat sink, a minimum of 3 feet of native soil placed above the liner.

B. Specimen Parameters

The sample shall be large enough to provide a minimum of three specimens and a recommended five specimens for flexural testing. The full CIPP sample wall thickness shall be tested, whenever possible. If the sample is irregular, distorted, or of such thickness that proper testing is inhibited, then the wall thickness shall be machined away from the inside pipe face of the sample only. Thus, the test specimen shall be cut from the outside pipe face of the CIPP sample. For specimens greater than ½ in (12.70 mm) in depth, the width-to-depth ratio of the specimen shall be increased to a minimum of 1:1 and shall not exceed 4:1.

C. Flexural Testing Procedure

1. Test specimens shall be oriented on the testing machine with the interior surface of the CIPP in tension. The following test procedure shall be followed after the sample is cured and removed.
2. Flexural (Bending) Properties - The initial tangent flexural modulus of elasticity and flexural stress should be measured for gravity applications in accordance with Test Method D 790, Test Method I-Procedure A.

D. Gravity Pipe Leakage Testing

Leakage testing shall be performed as specified in Section 01 45 23 for low pressure air test.

E. Delamination Test

For pulled-in place CIPP products where the inflation bladder remains a permanent part of the finished CIPP product, a delamination test shall be performed on each installation length. The sample shall be fabricated from material taken from the tube and the resin/catalyst system used and cured in a clamped mold placed in the downtube. A portion of the inflation bladder material in the sample shall be dry and isolated from the resin in order to separate tube layers for testing. Delamination testing shall be in accordance with ASTM D 903, with the following exceptions;

1. The rate of travel of the power-actuated grip shall be 1 in. (25 mm)/min.
2. Five test specimens shall be tested for each inversion specified.
3. The thickness of the test specimen shall be minimized, but should be sufficient to adequately test delamination of nonhomogeneous CIPP layers.
4. The peel or stripping strength between any nonhomogeneous layers of the CIPP laminate should be a minimum of 10 lb/in. (178.60g/mm) of width for typical CIPP applications.

F. Inspection and Acceptance

1. The installation shall be inspected by closed-circuit television if visual inspection cannot be accomplished. No infiltration of groundwater should be observed. All service entrances shall be accounted for and be unobstructed.

3.03 CLEAN-UP

A. Upon acceptance of the installation, the installer shall reinstate, to original conditions, the project area affected by the operations.

END OF SECTION

SECTION 33 01 33

SANITARY SEWER REHABILITATION - PIPE BURSTING

PART 1 GENERAL

1.01 DESCRIPTION

A. This section includes requirements to rehabilitate existing sanitary sewer by the pipe bursting method which splits the existing pipe and immediately installing a new polyethylene pipe and complete installation in accordance with the Contract Documents. Hydraulically and pneumatically operated equipment is allowed for this replacement.

1.02 QUALITY ASSURANCE

A. The Contractor shall be certified by the particular Pipe Bursting System Manufacturer that such firm is licensed installer of their system.

B. Polyethylene pipe jointing shall be performed by personnel trained in the use of thermal butt-fusion equipment and recommended methods for new pipe connections. Personnel directly involved with installing the new pipe shall receive training in the proper methods for handling and installing the polyethylene pipe. Training shall be performed by qualified representative.

C. The Contractor or the pipe bursting subcontractor shall have experience using the pipe-bursting method.

1.03 SUBMITTALS

A. Submit the following Contractor's Drawings:

1. Shop drawings, catalog data, and manufacturer's technical data showing complete information on material composition, physical properties, and dimensions of new pipe, fittings and pipe repair couplings. Include manufacturer's recommendation for handling, storage, and repair of pipe and fittings damaged.
2. Method of construction and restoration of existing sanitary sewer. This shall include detail drawings and written description of the entire construction procedure to install pipe.
3. Certification of workmen training for installing pipe.
4. Pre-burst television inspection video shall be made at contractor's expense and sent to Owner.
5. Post television in PACP format shall be made after installation and testing has been completed. Post television inspection reports and video shall be given to the City Engineer or his agent in a digital format capable of being read by

Pipe Tech software.

1.04 DELIVERY, STORAGE AND HANDLING

A. Transport, handle and store pipe and fittings as recommended by manufacturer.

B. If new pipe and fittings become damaged before or during installation, it shall be repaired as recommended by the manufacturer or replaced as required by the Engineer of Record at the Contractor's expense, before proceeding further.

C. Deliver, store and handle other materials as required to prevent damage.

1.05 METHODS FOR NEW PIPE INSTALLATION

A. The methods approved for rehabilitation of existing sanitary sewer by pipe bursting and installation of new polyethylene pipe are as follows:

1. Miller Expandit Trenches by Pipe Replacement by Miller Pipeline Corporation, 1-800-428-3742.
2. Grundocrack Pipe Replacement System by TT Technologies, Inc., 708-851-8200.
3. Trenchless Replacement System, 403-279-9876.
4. Or approved equal.

PART 2 PRODUCTS

2.01 MATERIALS

A. Polyethylene Plastic Pipe shall be PE3408 high density, extra high molecular weight polyethylene piping and meet the applicable requirements of ASTM F 714 Polyethylene (PE) Plastic Pipe (SDR-PR) Based on Outside Diameter. Pipe shall be a Type III, Class C, Category 5, Grade P34 material in accordance with ASTM D 1248, ASTM D 3350, cell classification shall be PE 345444C.

B. Sizes of the insertions to be used shall be such to renew the sewer to its original or greater than flow capacity. All sizes indicated on the plans shall be nominal inside diameter regardless of size.

C. All pipe shall be made of virgin material. No rework except that obtained from the manufacturer's own production of the same formulation shall be used.

D. The pipe shall be homogenous throughout and shall be free of visible cracks, holes, foreign material, blisters, or other deleterious faults.

E. Dimension Ratios: The minimum wall thickness of the polyethylene pipe shall be SDR 17.

F. Pipe Repair Couplings: The coupling shall be as recommended by the pipe manufacturer for the pipe size and class as specified.

G. Lateral connections shall be manufactured weld on saddles approved by pipe manufacturer. Transition from connection to lateral shall include a rigid gasketed connection.

2.02 TESTS

A. Tests for compliance with this specification shall be made as specific herein and in accordance with the applicable ASTM Specification. A certificate with this specification shall be furnished, upon request, by the manufacturer for all material furnished under this specification. Polyethylene plastic pipe and fittings may be rejected to meet any requirements of this specification.

PART 3 EXECUTION

3.01 BYPASSING SANITARY SEWER

A. Bypassing sanitary sewer pumping is required, as needed.

3.02 CLEANING AND INSPECTION

A. All internal debris shall be removed from the original pipeline. Gravity pipes shall be cleaned with hydraulically powered equipment, high-velocity jet cleaners, or mechanically powered equipment as necessary.

B. Inspection of pipelines shall be performed by experienced PACP defect rating trained personnel. The interior of the pipeline shall be carefully inspected to determine the location of any conditions which may prevent proper installation of the HDPE pipe, such as protruding service taps, collapsed or crushed pipe, and reductions in the cross-sectional area of more than 40%. These conditions shall be noted so that they can be corrected. The original pipeline shall be cleared of these obstructions at no additional cost to the owner. If inspection reveals an obstruction, which cannot be removed by conventional sewer cleaning equipment, then a point repair excavation should be made to uncover and remove or repair the obstruction.

C. If a condition exists which prevents a given section from being successfully burst, the section shall be replaced by conventional dig and replace methods at the base bid price. No additional allowance for television inspection or cleaning shall be allowed.

D. All laterals shall be inspected by a camera which can telescope to a minimum of 10 feet up the lateral and which can be inserted into the lateral from the main line, without the use of a clean out. All laterals shall be inspected prior to the start of the

bursting process. If a condition which precludes lining the lateral is observed, an open cut or pipe bursting method shall be used.

E. All pre-construction inspections shall be video taped, and all tapes provided with on screen notations indicating manhole numbers, direction of travel, and footage in the pipe. One copy of each tape shall be provided to the City Engineer or his agent at least fifteen working days prior to the lining operations. Because some line sections have a large number of existing laterals which could be eliminated by TV inspection, a period of fifteen days shall be required for the owner to review the videotape and render a decision on which laterals shall be lined or eliminated. Any issues with lining the segments shall be noted on the transmittal with each tape. Each tape shall have a clearly annotated log showing coverage, distances, defects, taps, and manholes.

F. Post-construction TV inspections including the mainline and laterals, to the cleanout, shall be provided to the City Engineer or his agent prior to acceptance of lines. All post-construction inspections shall be provided to the City Engineer or his agent in PACP format on CD in digital form. The software required to review this data shall be compatible with Pipe Tech and shall be provided at no additional cost to the Owner. TV logs shall be provided in a format compatible with Pipe Tech.

3.03 CONSTRUCTION METHODS

A. Insertion or launching pits shall only be allowed at locations of existing or proposed manholes, unless otherwise approved by Owner, to minimize impact of existing trees and other physical features.

B. Equipment used to perform the work shall be located away from buildings so as not to create a noise impact. Provide residential rated silencers or other devices to reduce machine noise.

C. The Contractor shall install all pulleys, rollers, bumpers, alignment control devices and other equipment required to protect existing manholes, and to protect the pipe from damage during installation. Lubrication may be used as recommended by the manufacturer. Under no circumstances shall the pipe be stressed beyond its elastic limit.

D. Existing pipe shall be cleaned prior to pipe bursting.

3.04 RECOVERY OF DEFECTIVE EQUIPMENT

A. Recovery of equipment which fails, or repairs to piping which breaks, during installation process and require excavation to be recovered or repaired, the Contractor shall restore the area totally; this includes: replacement of equipment, excavation, backfill, compaction, sheeting, shoring, bracing, dewatering, bypass pumping, pavement, subbase course, topsoil, seeding and all other work required to

recover equipment, at no additional expense to the Owner. Adequate equipment and materials shall be available on-site to expedite recovery and repairs.

3.05 FIELD TESTING

A. After the existing sanitary sewer is completely replaced, the Contractor shall internally inspect with television camera and video tape. The sanitary sewer shall be free from visual defects.

B. Defects which may affect the integrity or strength of the pipe in the opinion of the City Engineer or his agent shall be repaired or the pipe replaced at the Contractor's expense.

C. Pipe shall also be tested as specified in paragraph 3.03 of Section 01 45 23.

3.06 PIPE JOINING

A. The polyethylene pipe shall be assembled and joined at the site using the thermal butt-fusion method to provide a leak proof joint. Threaded or solvent-cement joints and connections are not permitted. All equipment and procedures used shall be used in strict compliance with the manufacturer's recommendations. Fusing shall be accomplished by personnel certified as fusion technicians by a manufacturer of polyethylene pipe and/or fusing equipments.

B. The butt-fused joint shall be true alignment and shall have uniform roll-back beads resulting from the use of proper temperature and pressure. The joint shall be allowed adequate cooling time before removal of pressure. The surfaces shall be smooth. The fused joint shall be watertight and shall have tensile strength equal to that of the pipe. All joints shall be subject to acceptance by the City Engineer or his agent prior to insertion. All defective joints shall be cut out and replaced at no cost to the Owner. Any section of the pipe with a gash, blister, abrasion, nick, scar, or other deleterious fault greater in depth than ten percent (10%) of the wall thickness, shall not be used and must be removed from the site. However, a defective area of the pipe may be cut out and the joint fused in accordance with the procedures stated above. In addition, any section of pipe having other defects such as concentrated ridges, discoloration, excessive spot roughness, pitting, variable wall thickness or any other defect of manufacturing or handling as determined by the City Engineer or his agent shall be discarded and not used.

C. Terminal sections pipe which are joined within the insertion pit shall be connected with a full circle fusion pipe fitting. Ends of pipes shall butt each other. Adequate time shall elapse to permit the pipe to shrink and rebound to the final location.

D. All connections shall be fusion welded to pipe. Strap on or compression transition couplings are not permitted. Adapters to service laterals shall be rigid gasketed.

3.07 WARRANTY

A. All work performed under this Contract shall be warranted to be free from defects in material and workmanship for a period of one year from the date of acceptance. If the City Engineer or his agent determines that the process has failed during the warranty period, the Contractor shall perform any and all repairs at no additional cost to the Owner.

END OF SECTION

SECTION 33 05 10

SEPARATION OF PIPE UTILITIES AND STREAM CROSSINGS

PART 1 GENERAL

1.01 REQUIREMENTS INCLUDED

A. Location of piped utilities to separate water mains from sewer facilities.

1.02 RELATED WORK

A. Specified elsewhere:

1. Section 03 30 00: Concrete Work
2. Section 31 23 33: Trenching, Backfilling and Compaction
3. Section 31 25 13: Soil and Erosion Control
4. Section 31 25 23: Rip-Rap
5. Section 33 05 23: Boring and Jacking
6. Section 33 11 00: Water Distribution Systems
7. Section 33 30 00: Sanitary Sewerage Systems
8. Section 33 40 00: Storm Drainage Systems

PART 2 PRODUCTS

(NOT APPLICABLE)

PART 3 EXECUTION

3.01 CROSSINGS AND PARALLEL INSTALLATION

A. Water Supply Interconnections

1. There shall be no physical connection between a public or private potable water supply system and a sewer, or appurtenance thereto which would permit the passage of any wastewater or polluted water into the potable supply.

B. Relation to Water Works Structures

1. It is generally recognized that sewers shall be kept remote from public water supply wells or other water supply sources and structures.

C. Relations to Water Mains

1. Horizontal Separation: Whenever possible, sewers should be laid at least 10

feet horizontally, from any existing or proposed water main. The distance should be measured edge to edge. Should local conditions prevent a lateral separation of 10 feet, a sewer may be laid closer than 10 feet to a water main if it is laid in a separate trench and if the elevation of the top (crown) of the sewer is at least 18 inches below the bottom (invert) of the water main.

2. Vertical Separation: Whenever sewers must cross under water mains, the sewer shall be laid at such elevation that the top of the sewer shall be laid at such elevation that the top of the sewer is at least 18 inches below the bottom of the water main. When the elevation of the sewer cannot be varied to meet the above requirement, the water main shall be relocated to provide this separation <u>or reconstructed with mechanical-joint pipe</u> for distance of 10 feet on each side of the sewer. One full length of water main should be centered over the sewer so that both joints are as far from the sewer as possible.
3. When it is impossible to obtain proper horizontal and vertical separation as stipulated above, the sewer shall be designed and constructed equal to the water main pipe and shall be pressure-tested to assure water-tightness at water main pressure (see drinking water criteria). Such arrangements are discouraged and adequate reason shall be provided to justify the design.

3.02 BACKFLOW PREVENTERS

A. State approved reduced pressure backflow prevention devices are required on all potable water mains serving the wastewater treatment plant or lift station, and where any actual or potential public portable water supply may be polluted or contaminated from a cross connection. A list of approved backflow preventers may be obtained from the Division of Water Supply.

B. Backflow preventers shall be installed as per the Design Criteria for Community Public Water Systems, Division of Water Supply. Below ground pit installations are not acceptable.

3.03 SEWERS IN RELATION TO STREAMS

A. Location of Sewers on Streams

The top of all sewers entering or crossing streams shall be at a sufficient depth below the natural bottom of the stream bed to protect the sewer line. In general the following cover requirements must be met:

1. One foot of cover (concrete) is required where the sewer is located in rock.
2. Three feet of cover is required in stabilized stream channels.
3. Seven feet of cover or more is required in shifting stream channels.

B. Sewers located along streams shall be located outside of the stream bed and sufficiently removed therefrom to minimize disturbance or root damage to streamside trees and vegetation.

C. Sewer outfalls, headwalls, manholes, gateboxes or other structures shall be located so they do not interfere with the free discharge of flood flows of the stream.

D. Sewers crossing streams shall be designed to cross the stream as nearly perpendicular to the stream flow as possible and shall be free from change in grade.

3.04 CONSTRUCTION

A. Sewers entering or crossing streams shall be constructed of ductile iron pipe with mechanical joints, concrete encased, or shall be so otherwise constructed that they remain watertight and free from changes in alignment or grade. Sewer systems shall be designed to minimize the number of stream crossings. The construction methods which minimize siltation shall be employed. Upon completion of construction, the stream shall be returned as near as possible to its original condition. The stream banks shall be seeded, planted or other erosion prevention methods employed to prevent erosion. Stream banks shall be sodded if necessary to prevent erosion. Where tree canopy has been removed, replacement trees shall be planted of natural species. The City Engineer or his agent shall specify the specific method or methods to be employed in the construction of the sewers in or near the stream to control siltation.

B. During construction of sewerage projects, the contractor shall be prohibited from unnecessarily disturbing or uprooting trees and vegetation along the stream bank and in the vicinity of the stream, dumping of soil and debris into streams and/or on banks of streams, changing course of the stream without encroachment permit, leaving cofferdams in streams, leaving temporary stream crossings for equipment, operating equipment in the stream, or pumping silt-laden water into the stream.

C. Contractor shall retard the rate of runoff from the construction site and control disposal of runoff including liberal use of silt fencing, shall trap sediment resulting from construction in temporary or permanent silt holding basins, including pump discharges resulting from dewatering operations; shall deposit out of the flood plain area all material and debris removed from the stream bed.

D. Uncased borings are not permitted under streams.

E. Contractor shall cleanup, grading, seeding, planting or restoration of the work area shall be carried out as early as practical as the construction proceeds.

3.05 SPECIAL CONSTRUCTION REQUIREMENTS

A. Special design requirements shall be employed to prevent stream drainage from sinking at the crossing and following along the sewer pipe bedding. This can be accomplished with an entrench impounding structure of compacted clay. Other proposals may be considered.

3.06 AERIAL CROSSINGS

A. Sewers constructed on piers across ravines or streams shall be allowed when it can be demonstrated that no other practical alternative exists or local knowledge or in the design Engineer's judgment other methods are not as reliable.

B. Support shall be provided for all joints. All supports shall be designed to prevent frost heave, overturning or settlement. Precautions against freezing such as insulation or increased slope shall be provided. Expansion jointing shall be provided between above-ground and below-ground sewers. The impact of flood waters and debris shall be considered. The bottom of the pipe should be placed no lower than the elevation of the 50 year flood plain.

3.07 PERMITS

A. It is the owner's responsibility to obtain all necessary permits along streams or rivers, i.e. Corps of Engineers, TVA, or the Natural Resources Section of the Division of Water Pollution Control.

3.08 INVERTED SIPHONS

A. Under normal conditions inverted siphons should not be used; but if they are, then the following conditions <u>must</u> be met:

B. Inverted siphons shall have a minimum of two barrels, with a minimum pipe size of six inches and shall be provided with necessary appurtenances for convenient flushing and maintenance. The manholes shall be adequate clearances for rodding. Sufficient head shall be provided and pipe sizes selected to secure velocities of at least 3.0 feet per second for average flows. The inlet and outlet details shall be arranged so that the normal flow is diverted to one barrel, and so that either barrel may be cut out of service for cleaning. <u>When inverted siphons are used, the Engineer of Record must furnish hydraulic calculations with the plans</u>. Proper access must be maintained.

PART 4 MEASUREMENT AND PAYMENT

4.01 CROSSINGS AND SIPHONS

A. Crossing and siphons shall be measured and paid for by the number of each units installed and accepted.

B. Crossings shall be measured beginning 5 feet each side of the creek or stream bank and through the flowing creek or stream, for each constructed.

C. Siphons shall be measured from the edges at the structure that the siphon is housed

within for each constructed.

D. Crossing payment shall be paid for at the unit price per each installed and accepted unit.

E. Siphon payment shall be paid for at the unit price per each installed and accepted unit.

F. Excavation, structures, temporary sediment controls, temporary stream crossings, concrete, concrete easements, concrete piers, rip-rap, soil stabilization, seeding, mulching, vegetation replacement, piped utility, disposal of spoil, testing, replacing of defective parts, fitting, culverts, silt pits, coffer dams, or other required equipment to complete an operating system shall not be paid for separately; but, shall be included in the unit cost of each for which they are associated with.

G. When not provided for on the Bid Form, payment for crossings and siphons shall not be made directly, but shall be included in the payment for the items with which it is associated.

END OF SECTION

SECTION 33 05 13

SEWER MANHOLE REHABILITATION

PART 1 GENERAL

1.01 DESCRIPTION

A. This section includes requirements to rehabilitate existing sanitary sewer manholes. Including elimination of exfiltration and infiltration; stopping corrosion degradation by H_2S; and restoration of structural integrity to concrete and masonry sewer manholes.

1.02 REFERENCE

A. AASHTO T-277, Rapid Determination of Chloride Permeability of Concrete.

B. ASTM C 109, Compressive Strength Hydraulic Cement Mortars (Using 2" Cube Specimens).

C. ASTM C 144, Standard Specification for Aggregate for Masonry Mortar.

D. ASTM C 150, Standard Specification for Portland Cement.

E. ASTM C 267, Chemical Resistance of Mortar and Grouts.

F. ASTM C 321, Bond Strength of Chemical-Resistant Mortars.

G. ASTM C 348, Flexural Strength Hydraulic Cement Mortars.

H. ASTM C 666, Resistance of Concrete to Rapid Freezing and Thawing.

1.03 QUALITY ASSURANCE

A. The Contractor shall be certified by the particular manhole manufacturer that such firm is licensed installer of their system.

B. Submit manufacturer's certification of contractor's successful completion of training in the use of application equipment, rehabilitation products, and rehabilitation procedures.

1.04 SUBMITTALS

A. Test reports: Provide independent testing laboratory analysis of rehabilitation materials showing:
   1. Compressive strength as determined by ASTMC 109.
   2. Flexural strength as determined by ASTM C 348.
   3. Bond strength as determined by ASTM C 321.
   4. Permeability rating as determined by AASHTO T-277.

1.05 DELIVERY, STORAGE AND HANDLING

A. Keep materials dry and sealed until ready to be mixed at site.

PART 2 PRODUCTS

2.01 APPLICATION EQUIPMENT

A. Specifically designed for continuous mixing and spraying of rehabilitation material and for cleaning manhole structures prior to application process.

B. Engine: 30 HP diesel, 2 cylinder, air cooled, 4 cycle engine.

C. Hydraulics:
   1. Open centered.
   2. Variable drive motors.

D. Mixing System:
   1. Ribbon mixer with lift and fold action for rapid wetting and blending of mortar.
   2. Metered water system with spray bar to minimize excessive water/cement ratios.

E. Water System:
   1. 300 gallon polyethylene tank enclosed in steel frame with dead air space between tank and frame for insulation.
   2. Quick-connect fittings for rapid filling from fire hydrants and other systems.
   3. Self-contained 40 PSI water pump.

F. Air System:
   1. On board oil-free air compressor:
      a. Produces 18 CFM free air at 100 PSI.
      b. Includes air pressure tank, unloader valve, filter, pressure gage, and regulator.
   2. Used to spray apply material from nozzle to substrate.

G. Progressive Cavity Pump:
   1. Positive displacement
   2. Non-pulsating flow.
   3. Variable speed.
   4. Reversible.
   5. Low shearing action.
   6. Minimum wear characteristics.
   7. Available in 1-, 2-, 3-, and 4-stage configurations.

H. Trailer:
   1. All components factory mounted.
   2. Tandem axle with electric or hydraulic brakes.
   3. Running lights.
   4. Tongue jack.
   5. Storage for 1 pallet of rehabilitation material.
   6. Lockable storage compartments for hoses, tools, and accessories.
   7. Adjustable hitch height.

I. Optional Equipment:
   1. 1-inch grout hose with air line and fittings in 25-foot, 50-foot, and 100-foot sections.
   2. Grout spray nozzle.
   3. High pressure washer driven by main engine.
   a. Creates 3500 PSI static pressure adjustable down to 1200 PSI.
   4. High pressure 50-foot hose for pressure washer.
   5. Hydraulic operated discharge gate on mixer.
   6. Air blower with 15 feet of 8-inch flex hose.
   a. Portable.
   b. Gasoline powered.

2.02 WATER PLUGGING COMPOUND-CEMENT BASED

A. Quick-setting (60 seconds or less) cement based mortar used to stop active infiltration of ground water.
B. Excellent bonding characteristics conforming with ASTM C 150 and ASTM C 144 testing procedures.

2.03 PATCHING COMPOUND-CEMENT BASED

A. Self Bonding.

B. High strength cement mortar:
   1. Compressive strength: 6,000 psi at 28 days.
   2. Flexural strength: 875 psi at 28 days.
   3. Maximum volume change: 0.02 percent.

C. Use to reform and resurface manhole benches and inverts and to fill large voids.

D. Rapid setting to minimize interruption of flows.

2.04 REHABILITATION MORTAR-CEMENT BASED

A. Provide a permanent bond to seal concrete and masonry manholes from infiltration and ex-filtration in a high sulfide environment.

B. Shall be factory blended.

C. High strength cement based, polypropylene fiber reinforced, shrinkage compensated mortar enhanced with NSG aggregate (nepheline synite granite).

D. Specifically designed for placement by low pressure spraying (shotcreting) to vertical and overhead surfaces of concrete and masonry structures.

E. Designed for monolithic one pass application with a minimum thickness of ½ inch to 3 inches.

F. Shall have high early and ultimate compressive, flexural, and bond strengths.

G. Shall be resistant to sulfate attack.

H. Shall have extremely low permeability (350 Coulombs).

2.05 REHABILITATION MATERIAL – URETHANE BASED

A. As an option the material sprayed onto the surface of the manhole may be a urethane resin system formulated for the application within a sanitary sewer environment. The urethane shall exhibit suitable corrosion resistance and enhance the integrity of the existing manhole. Unless dictated by varying effluents, the spray system shall be a urethane and exhibit the cured physical strengths specified herein.

B. The cured urethane system shall conform to the minimum physical standards, as listed below. The long-term data is for a 50-year design life of the process.

CURED URETHANE	STANDARD	LONG-TERM DATA
TENSILE STRESS	ASTM D-638	5,000psi
FLEXURAL STRESS	ASTM D-790	10,000psi
FLEXURAL MODULUS	ASTM D-790	550,000psi

2.06 MANHOLE RISER REHABILITATION

A. All rehabilitation products shall be designed to seal to the existing (or new) manhole frame and cover. Seal shall be designed to provide the same level of water infiltration resistance at the joint as the remainder of the rehabilitation process. It shall be Flex-Seal utility sealant by Sealing Systems, Inc. or equal as approved by the Engineer. If a process is unable to provide this level of resistance, a separate flexible chimney seal, with stainless steel anchor bands shall be installed. Mortar-cement based rehabilitation systems require the use of a separate chimney seal.

PART 3 APPLICATION

3.01 ACCEPTABLE APPLICATORS

A. Employ only manufacturer certified applicators for the work specified in this Section.

3.02 INSPECTION AND PREPARATION

A. Follow local and federal (OSHA) standards regulating work in confined spaces.

B. Remove manhole cover.

C. Plug services or bypass pump lines where conditions require.

D. With flows stopped, begin surface preparation.

3.03 SURFACE PREPARATION

A. Provide a clean, damp surface to allow for good mechanical bond of rehabilitation materials.

B. Begin cleaning from top of frame by removing unsound concrete, loose mortar, bricks, deteriorated steps, foreign material, and other debris by high pressure water blasting (3,500 psi).

C. Dispose of hazardous material in accordance with requirements of regulatory authorities.

3.05 INVERTS AND BENCHES

A. Prepare rapid-setting high-strength mortar in accordance with manufacturer's instructions on package label.

B. Reform inverts and benches.

3.06 LARGE VOIDS

A. Prepare rapid-setting high-strength mortar in accordance with manufacturer's instructions on package label.

B. Fill large voids.

3.07 RESTORATION OF WALL AND CONE

A. Prepare rehabilitation material in accordance with manufacturer's instructions.
   1. Maintain proper water/cement ratio to achieve ultimate strengths and densities of cured matrix.

B. Spray apply in accordance with manufacturer's application procedures and Operation and Maintenance Manual using specified application equipment.
   1. Begin spraying at bottom of wall.
   2. With one continuous application, spray to coat manhole wall and cone.

C. Achieve monolithic one-pass application from 2-1/2 inch to 3 inches on vertical and overhead surfaces.

D. For urethane based material, calculations for thickness shall be submitted for approval.

3.08 FINISHING

A. Immediately following spray application, use rounded pool trowel to finish surface.

B. Use upward strokes to compress and light circular motions to gain a final smooth surface.

C. Do not over trowel.

3.09 CURING

A. Replace manhole cover and allow to cure.

3.10 INSPECTION AND TESTING

A. After curing is complete, test manhole for water tightness in accordance with specification Section 01 45 23.

END OF SECTION

SECTION 33 05 15

PIPE JOINTS, FITTINGS AND APPURTENANCES

PART 1 GENERAL

1.01 WORK INCLUDED

A. The work shall include providing all equipment, materials, labor and services required to provide all piping, joints, fittings and appurtenances specified and indicated.

1.02 RELATED WORK

A. Specified elsewhere:

1. Section 01 11 13: Summary of Work
2. Section 31 23 33: Trenching, Backfilling, and Compaction

1.03 QUALITY ASSURANCE

A. All materials and appurtenances required for the work shall be new, of first class quality and shall be furnished, delivered, erected, connected and finished in every detail as specified or indicated. All materials found defective, regardless of the circumstances, shall be replaced with new material at the expense of the Contractor.

B. Comply with all codes, laws, ordinances and regulations of governmental authorities including, but not limited to, local municipalities and sanitary districts having jurisdiction over this part of the work.

1.04 REFERENCES

A. The materials specified for the construction shall comply with the latest revisions of the applicable American Society for Testing Materials (ASTM), American Water Works Association (AWWA), American National Standards Institute (ANSI) and the Tennessee Department of Transportation (TDOT) standards, and the Standard Details herein.

B. Tennessee Department of Transportation (TDOT) - Standard Specifications and Standard Details; latest revisions.

C. American National Standards Institute (ANSI)/American Water Works Association (AWWA); latest revision:

1. ANSI/AWWA C 104/A 21.4: Pipeline Coatings and Linings
2. ANSI/AWWA C 110/A 21.10: Fittings, Flanges and Valves

3. ANSI/AWWA C 111/A 21.11: Gaskets
4. ANSI/AWWA C 151/A 21.51: Pipe, Iron
5. ANSI/AWWA C800-89: Underground Service Lines Valves and Fittings

D. American Society for Testing Materials (ASTM); latest revision:

1. A48: Standard Specification for Gray Iron Castings
2. C14: Standard Specification for Concrete Sewer, Storm Drain and Culvert Pipe
3. C150: Standard Specification for Portland Cement
4. D1785: Specification for Polyvinyl Chloride (PVC) Plastic Pipe, Schedules 40, 80 and 120
5. D3034: Specification for Type PSM Polyvinyl Chloride (PVC) Sewer Pipe and Fittings
6. F894: Specification for Polyethylene (PE) large diameter profile wall sewer and drain pipe
7. D3350: Standard Specification for Polyethylene Plastics Pipe and Fittings Materials

E. American Concrete Institute (ACI); latest revision:

1. 318: Building Code Requirements for Reinforced Concrete

1.05 SUBMITTALS

A. Shop drawings, catalog data sheets, diagrams, design calculations, and other such data necessary to describe completely and to substantiate compliance with the drawings and specifications shall be submitted for all materials, joints and accessories specified in this section, in accordance with the procedure set forth in Section 01 33 00.

PART 2 PRODUCTS

2.01 PIPE SELECTIONS

A. The Contractor shall install only 1 type of pipe between structures except where ductile iron pipe is specified or indicated. Where existing pipe is to be replaced or extended the same type of pipe shall be installed, unless specified or indicated otherwise. All piping shall be installed in strict accordance with the recommendations of the manufacturer.

B. Gravity sanitary sewers with an inside diameter less than or equal to 18 inches shall be smooth inside and outside wall polyvinyl chloride, HDPE, or ductile iron pipe, at the Contractor's option, unless specified or indicated otherwise. Carrier pipes in casing pipes shall be ductile iron pipe.

C. Sanitary sewer laterals shall be either Schedule 40 polyvinyl chloride or HDPE, the same material as the gravity sanitary sewer, or ductile iron pipe, at the Contractor's option, unless specified or indicated otherwise.

2.02 TYPES OF PIPE

A. Larger diameter PVC pipe and fittings shall conform to ASTM F-679 or ASTM F-794, and shall be made of PVC plastic. The pipe stiffness shall meet or exceed 46 psi when tested in accordance with ASTM D2412. Pipe shall be Carlon PVC pipe, Certainteed, or equal.

B. High-Density Polyethylene Pipe:

1. Pipe and fitting materials shall be high-density polyethylene meeting ASTM D3350 Cell Classification 324420C for 4"-10" or 335420C for 12"-60" diameters.
2. 4"-10" diameters shall meet AASHTO to M252 Type S. 12"-48" diameters shall meet AASHTO M294-97 Type S. 54" and 60" shall meet AASHTO MP7-97.

C. Polyvinyl chloride (PVC) pipe and fittings shall be SDR 35 and shall conform with ASTM D 3034. Schedule 40 PVC pipe for service laterals shall conform to ASTM D 1785.

D. Ductile iron pipe shall conform with AWWA C 151/ANSI 21.51 and fittings shall conform with ANSI/AWWA C 110, or C153 (compact fittings). The pipe and fittings shall be asphalt coated and cement lined in accordance with AWWA C 104/ANSI 21.40. The pipe thickness shall conform with AWWA C 150/ANSI 21.50 and shall be Class 250, as a minimum, through the 12" size unless specified or indicated otherwise.

2.03 JOINTS AND COUPLINGS

A. General: The Contractor shall include in his bid a sum sufficient to cover the cost of the field services of experienced and qualified representatives of the manufacturer whose products are approved for the work. Such representative shall be available to instruct the Contractor's personnel in the proper jointing procedure to be used to secure the best possible joints with the materials selected.

B. PVC pipe and fittings shall be bell and spigot type joints. The bell and spigot joint shall be sealed with elastomeric gaskets conforming to ASTM D 3212. The joints shall be made in strict accordance with the recommendation of the pipe manufacturer.

C. Joints for all gravity PVC pipe and polyethylene shall be push-on type bell and spigot, sealed with elastomeric gaskets, conforming to ASTM D 3212.

D. Ductile iron pipe and fittings for buried service shall be either mechanical or bell and spigot type joints as specified or indicated. Joints shall be made with a single watertight rubber gasket manufactured in accordance with AWWA C 111/ANSI 21.11. The joints shall be made in strict accordance with the recommendations of the pipe manufacturer. Joints for above ground or in-vault service shall be flanged joints in accordance with AWWA C115.

E. Lateral Connections

1. New pipe connections shall be made with tees or wyes. On HDPE pipe, fusion fittings shall be used.
2. Connections to laterals shall be by gasketed or fusion fittings.
3. Lateral connections to main lines shall be with gasketed fittings and include a 2-way cleanout at the property line.
4. Cleanouts shall have a cast iron box per detail A3.4.
5. Transitions from proposed 6 inch laterals to existing 4 inch service lines shall be made with an eccentric reducer and shall provide for a smooth invert transition.

2.04 SEWER SYSTEM APPURTENANCES

A. Sanitary sewer lateral connections shall include all pipe required at the depths encountered and shall include the saddle taps, the tee nipple connections, the wyes or the tees required at the connection to the sewer line, and shall include pipe to run to the property line connection point to the residences' system. The length shown on the drawings is an approximate value and the location shall be adjusted to suit the requirements of each residence. Shop drawings shall be submitted for the type of connection proposed. The work shall include the connection to the existing lateral pipe, if one exists, or capping and marking the end of the pipe if there is no existing pipe. No sewer pipe shall be cut for lateral connections except where permitted by the City Engineer or his agent. Taps shall be made by means of a mechanical sewer tap except as otherwise permitted by the City Engineer or his agent. The pipe shall be laid to the property line and capped, if not connected to the service connection. After backfilling the trench, a 2 x 4 x 18 inch stake with the end painted orange shall be driven, flush with the ground, at the cap to mark its location.

B. Plugs or caps used shall be manufactured specifically for the type of pipe used. They shall be secured such that they are watertight and able to withstand the internal pressure applied by air or exfiltration testing.

END OF SECTION

SECTION 33 05 23

BORING AND JACKING

PART 1 GENERAL

1.01 WORK INCLUDED

A. Placing casing and carrier pipe by boring and jacking under highways and railroads.

1.02 RELATED WORK

A. Specified elsewhere:

1. Section 33 11 00: Water Distribution Systems
2. Section 33 30 00: Sanitary Sewer Systems
3. Section 33 40 00: Storm Drainage Systems

1.03 REGULATIONS AND PERMITS

A. Permits for crossing highways or railroads shall be obtained by the Owner.

B. For highway crossings, satisfy the Highway Department to the extent of the Owner's posted surety bonds.

C. For railroad crossings, furnish certificates of insurance in amounts established by the railroad company, naming the railroad as the insured.

PART 2 PRODUCTS

2.01 STEEL CASING PIPE

A. Minimum yield strength of 35,000 psi.

B. Minimum thickness:

Nominal Diameter (inches)	Minimum Thickness (inches)
Under 14	0.188
14 - 16	0.219
18	0.250
20	0.281
22	0.312
24	0.344
26	0.375
28 - 30	0.406
32	0.438
34 - 36	0.469
38 - 42	0.500

C. Where casing pipes are to be installed under railroads, provide with protective bituminous coating, cathodic protection, or an increased wall thickness one standard size greater than that shown above. Increase a minimum of 0.063" except for diameters under 12-3/4".

D. Steel casing pipe shall be of continuous weld construction and installed with welded joints.

2.02 CARRIER PIPE

A. Carrier pipe installed in the casing pipe shall be as specified under the appropriate Piped Utility Section and as shown on the drawings.

PART 3 EXECUTION

3.01 GENERAL REQUIREMENTS

A. Perform all crossings according to the requirements of the governing highway department or Railroad Company.

B. Notify the appropriate authorities involved and request their supervisory services during construction.

C. Provide necessary safeguards to protect the crossing.

D. Where bored highway installations are not shown on the plans, open cut the crossing and provide a casing pipe only if required by the governing highway department.

3.02 INSTALLATION

A. Perform all crossings in the manner shown on the drawings, except as otherwise directed by the highway department or railroad company.

B. Dry bore an opening under the crossing.

C. Jack the casing pipe, of the type and size specified, into the bored opening.

D. Install the appropriate carrier pipe into the casing pipe.

E. Test the carrier pipe according to the appropriate Piped Utility Sections.

3.03 MEASUREMENT AND PAYMENT - BORING AND JACKING

A. Boring and jacking including all work necessary for the installation and testing of the casing and carrier pipe, shall be measured for payment by the linear foot installed.

B. If provided for on the Bid Form, boring and jacking as above stipulated shall be paid for by the Contract unit price per linear foot. If not provided for on the Bid Form, payment for boring and jacking shall not be made directly, but shall be included in the payment for the items with which it is associated.

END OF SECTION

SECTION 33 11 00
WATER DISTRIBUTION SYSTEMS

PART 1 GENERAL

1.01 WORK INCLUDED

A. Contractor shall be responsible for safely storing materials needed for the work which have been accepted by him until they have been incorporated into the completed project. Keep the interiors of all pipes, fittings, and other accessories free form dirt and foreign matter at all times.

B. Contractor shall take all precautions necessary to keep the interior of pipe and fittings free of foreign material. Each joint of pipe, fittings, and other required appurtenances shall be inspected for foreign material prior to installation. Ends of made-up fittings shall be tape sealed prior to installation. Open ends of pipe shall ends of pipe shall be watertight plugged at the close of each workday and during temporary discontinuances of pipe laying.

C. Megalug joint restraints are to be used at all valves and fittings without exception.

D. Additional restrained length of pipe before and after valves and fittings shall be accomplished by using American's "Fast-Grip" gasket or approved equal.

E. Contractor shall submit engineering product data on all materials to the Project Manager for approval prior to start of construction.

F. Final grading, seeding, mulching, and landscaping of disturbed areas shall be completed within 15 working days from the completion of every 1000-feet of waterline installed. Additional final grading, seeding, mulching, and landscaping of disturbed areas associated with water service connections and waterline testing shall be completed within 15 working days after the completion of those tasks. Disturbed ditch lines shall be reestablished in conjunction with pipe laying activities. This includes the application of seeding, mulching, and landscaping matting. This work shall meet all the requirements of the applicable specification sections listed below.

G. Contractor shall furnish and install temporary connection devices when connecting to existing water lines until completion of testing, flushing and a passed bacterial test.

1.02 RELATED WORK

A. Specified elsewhere:

1. Section 31 23 33: Trenching, Backfilling and Compaction
2. Section 31 25 13: Soil and Erosion Control

3. Section 32 12 16: Asphaltic Concrete Paving
4. Section 32 13 13: Portland Cement Concrete Paving
5. Section 32 16 13: Concrete Sidewalks, Curbs and Gutters
6. Section 32 91 19: Topsoil
7. Section 32 92 19: Lawn and Grass Landscaping, Temporary Seeding
8. Section 32 92 20: Lawn and Grass Landscaping, Permanent Seeding
9. Section 32 92 23: Sodding
10. Section 33 05 10: Separation of Piped Utilities and Stream Crossings
11. Section 33 05 23: Boring and Jacking

PART 2 PRODUCTS

2.01 DUCTILE IRON PIPE AND FITTINGS

A. Ductile iron pipe shall be plain end with push-on, single gasket joints. 4inch through 12-inch pipe shall be pressure class 350 and 16-inch through 30-inch shall be pressure class 250 with wall thicknesses as specified in ANSI A21.50/AWWA C150. Pipe laying lengths shall be standard unless specified on the contract drawings.

B. Ductile iron pipe shall be manufactured in accordance with ANSI A21.51/AWWA C151. It shall be tested in accordance with ASTM A339 and shall be subjected to and able to withstand a hydrostatic pressure of 500 psi.

C. The push-on, single gasket joints shall be either American's "Fastite", U.S. Pipe's "Tyton", or approved equal. They shall be UL approved and able to withstand 250 psi of operating pressure. The gasket shall be of high quality vulcanized rubber made in the form of a solid ring to exact dimensions.

D. Restrained joints shall be provided before and after fittings as shown in the contract drawings and in all tunnel and bore casing. Restrained joints shall be American's "Fast-Grip" gasket or approved equal.

E. Pipe lubricant shall be nontoxic, impart no taste or odor, and have no harmful effect on the gasket. It shall have a consistency which allows it to be easily applied to the pipe in any conditions.

F. Fittings shall be standard mechanical joint, ductile iron. All fittings shall conform to ANSI A21.53/AWWA C153 and shall be pressure rated at 350 psi.

G. Pipe and fittings shall be lined with enameline or thin cement lining as specified in ANSI A21.4/AWWA C104. A bituminous seal coat or asphalt emulsion spray coat approximately one mil thick shall be applied to the cement lining and the exterior of the pipe.

H. All ductile iron pipe and fittings shall be clearly marked with the manufacturer's

name and Ductile Iron.

2.02 POLYVINYL CHLORIDE PIPE (PVC) AND FITTINGS

A. PVC pipe and fittings shall be used for 2-inch installations. It shall conform with the requirements of ASTM D-2241 and AWWA C-900. PVC pipe and fittings shall be manufactured from NSF Type 1, Grade 1 impact improved virgin resin.

B. PVC joints shall be sealed with a rubber ring and non-toxic lubricant provided by the pipe manufacturer as specified in ASTM D-3139 and ASTM F-477.

C. Unless otherwise specified on the contract drawings, PVC pipe and fittings shall be SDR-21 rated for 200 psi working pressure.

D. All PVC pipe and fittings shall be clearly marked with the manufacturer's name, nominal diameter, SDF, ASTM D-2241, pressure rating, and NSF approval seal.

E. A #14 bare copper wire shall be installed with all PVC pipe.

2.03 COPPER PIPE

A. Copper pipe shall be Type K meeting the requirements of ASTM B-88. It shall not contain less than 99.9% copper and not more than 0.04% phosphorous.

B. Copper pipe shall be rated for 160 psi working pressure.

2.04 GATE VALVES

A. 2-inch through 12-inch valves shall be gate valves. Gate valves shall be manufactured and tested in accordance with AWWA C509. Gate valves shall be resilient seated by a cast iron gate having a vulcanized synthetic rubber coating or a rubber seat mechanically retained on the gate. Gate valves shall be rated for 250-psi working pressure.

B. Buried valves shall have integrally cast mechanical joint ends in accordance with AWWA C111 and a 2-inch square wrench nut for valve operation. 2-inch gate valves shall be iron pipe threaded. Exposed valves in structures shall have flanged ends and removable hand wheel operators. The direction of opening shall be counter-clockwise.

C. The valve body, bonnet, and bonnet cover shall be ASTM A126 Class B ductile iron of ASTM A536 ductile iron. All interior and exterior ferrous surfaces of the valve shall be protected by a fusion-bonded epoxy coating.

D. Gate valves shall have a non-rising stem with two O-ring type seals located above the trust collar.

E. Gate valves shall have cast markings on the body to identify the size, class, year of manufacture, and the manufacturer.

2.05 BUTTERFLY VALVES

A. Valves 16-inch and larger shall be butterfly valves with open/close indicator designed for direct burial service. Butterfly valves shall be manufactured and tested in accordance with AWWA C504. Butterfly valves shall be rated for 150-psi working pressure.

B. The valve body and valve disc shall be constructed with ASTM A536, grade 65-45-12 ductile iron with integrally cast mechanical joint ends in accordance with AWWA C111.

C. The valve shaft shall be turned, ground, and polished and constructed with Type 304 or Type 316 stainless steel. Shaft diameters must meet the minimum requirements specified by AWWA C504 for Class 150B.

D. Valves shall be resilient seated and meet one of the following two design criteria:

1. Resilient Seat in the Valve Body: Valve seats shall be of a synthetic rubber compound vulcanized or bonded to valve body. The seat bond must withstand 75 pounds per inch of pull under test procedure ASTM D429, Method B.
2. Resilient Seat Attached to the Valve Disc: The valve disc shall be fitted with a resilient seat of synthetic rubber fixed in place with a retaining ring and cap screws passing through the rubber seat. The retaining ring and cap screws shall be 18-8 stainless steel. The rubber seat shall be replaceable in the field.

E. Valves shall be fitted with sleeve type bearings contained in the hubs of the valve body. Bearings shall be corrosion resistant and self-lubricating. Bearing loads shall not exceed 1/5 of the compressive strength of the bearing or shaft material.

1. Packing shall be of the O-ring or self-adjusting Chevron type.
2. Valve operators shall conform to AWWA C504.
3. Valve operators shall be of the traveling not, self-locking type and shall be designed to hold the valve in any intermediate position between fully open and fully closed without creeping or fluttering. Operators shall be equipped with mechanical stop limiting devices to over-travel of the disc in the open and closed positions. Valve operators shall be designed to withstand a minimum input torque at the fully open or fully closed position of 300 foot-pounds without damage to the valve or operator. Valve operators shall be fully enclosed and designed to withstand continuous submergence in water to a head pressure of 25 feet.

F. Butterfly valves shall have cast markings on the body or shall have a cast plate

attached to the body to identify the size, class, year of manufacture, and the manufacturer.

2.06 TAPPING VALVES AND SLEEVES

A. Tapping valves 12-inch and smaller shall conform to AWWA C509 and tapping valves larger than 12-inches shall conform to AWWA C500. Tapping valves shall comply with the previously outlined Materials Specifications for gate valves except as modified for passage and clearance of tapping machine cutters.

B. Tapping sleeves shall be as shown in the Standard Details provided in the Contract Drawings.

2.07 FIRE HYDRANTS

A. Fire hydrants shall be silver.

B. Fire hydrants shall be dry barrel compression type with the main valve opening against the pressure and closing with the pressure in compliance with AWWA C502. The main valve opening shall not be less than 5 ¼inches in diameter with the main valve facing made of balata or similar material. The bottom stem threads of the main valve rod shall be fitted with an acorn nut or suitable means for sealing the threads away from water. Fire hydrants shall be equipped with a safety flange located not more than 2-inches above grade with a two-piece breakaway shaft assembly. Two 2 ½-inch brass hose nozzles and one brass steamer nozzle shall be inserted into the hydrant barrel and pinned to prevent turning.

C. Fire hydrant shall be connected to the main by a 6-inch mechanical joint shoe and fitted with strapping lugs, unless otherwise shown on the contract drawings. The hydrant shoe shall have two positive acting non-corrodible drain valves which drain the hydrant completely by opening as soon as the main valve is closed and by closing tightly when the main valve is open. Drain valves operated by springs or gravity shall not be accepted. Bury depth shall be 36-inches. Crushed stone shall be placed a minimum of 12inches around the entire base of the hydrant.

D. The bonnet-packing gland shall be solid bronze and the gland bolts shall be steel with bronze nuts. A double O-ring seal may be used in lieu of a conventional stuffing box.

E. Fire hydrants shall open by turning counter-clockwise. Hydrants shall have cast markings indicating the hydrant manufacturer, year of manufacture, main valve size, and direction of opening.

2.08 AIR RELEASE VALVES

A. Air release valves shall be constructed in accordance with the Standard Details provided in the Contract Drawings.

2.09 BLOWOFF VALVES

A. Blowoff valves shall be constructed in accordance with the Standard Details provided in the Contract Drawings.

2.10 PRESSURE REDUCING VALVES

A. Pressure reducing valves shall be constructed in accordance with the Standard Details provided in the Contract Drawings.

2.11 SERVICE CONNECTIONS

A. Service connections shall be constructed in accordance with the Standard Details provided in the Contract Drawings.

2.12 VALVE BOXES

A. Valve boxes shall be constructed in accordance with the Standard Details provided in the Contract Drawings.

PART 3 EXECUTION

3.01 INSTALLATION OF WATERLINES AND APPURTENANCES

A. Unless otherwise indicated on the Contract Drawings, all waterlines shall have a minimum of 30-inches of cover from the top of the pipe and a maximum of 5-feet of cover to the bottom of the pipe.

B. All pipe, valves, fittings, and hydrants shall be unloaded from trucks using suitable tools and equipment. Special care shall be taken at all times in handling water system materials. All water system materials shall be lowered into a trench one piece at a time and in a manner that the material, including the coating or lining, is not damaged. All materials shall be inspected for defects prior to installation and shall not be installed if any defects are found.

C. Prepare all trench bottoms with proper bedding according to Section 31 23 33 prior to installing any pipe. Trench bottoms shall be prepared so that the entire pipe barrel is laying on a solid foundation and not being supported by the bells of the pipe. Pipe shall never be installed directly on solid rock.

D. Pipe shall be kept free of foreign materials. During the installation of pipe, every precaution shall be taken to prevent foreign material, including trench water, from entering the pipe. Brush and wipe clean the inside of the bell (particularly the gasket recess), the outside of the spigot, and the gasket prior to the pipe installation.

E. After a joint of pipe has been placed in the trench, the appropriate gasket shall be carefully installed in the bell's gasket recess. The next joint of pipe shall be lowered into position and then the pipe lubricant applied to the spigot end. Center the spigot end in the bell of the adjacent pipe and insert to the depth specified by the pipe manufacturer. Secure the pipe in place by tamping an approved backfill material around it.

F. Open ends of pipe shall be watertight plugged at the close of each workday and during temporary discontinuances of pipe laying.

G. Wherever pipe must be deflected from a straight line in either the vertical or horizontal direction, the amount of deflection shall not exceed the manufacturer's recommendation.

H. Cut and machine pipe for installing valves, fittings, and hydrants in a neat and workmanlike manner without damaging the pipe to leave a smooth end at a right angle to the axis of the pipe.

I. All valves, fittings, hydrants, and other water system appurtenances shall be installed as shown and specified in the Standard Details provided in the Contract Drawings.

J. Megalug joint restraints shall be used at all valves and fittings without exception and shall be installed as specified by the manufacturer. Thrust blocking shall be used in conjunction with Megalugs where appropriate. Thrust blocking shall be installed as shown and specified in the Standard Details provided in the Contract Drawings.

K. Additional length of pipe before and after valves and fittings, pipe in bores, pipe used at creek crossings, or as shown on the Contract Drawings shall be restrained using restraining gaskets. Restrained joints shall be installed as shown and specified in the Standard Details provided in the Contract Drawings.

3.02 WATERLINE PRESSURE TEST

A. Pressure test shall be performed in accordance with AWWA C600. Pressure test shall be performed after pipe has been installed and backfilled to pressure of 1.5

times the working pressure at the lowest point in the line. All services shall be installed prior to the pressure test and are considered part of the pressure test. The duration of the pressure test shall be a minimum of 2-hours and shall not be tested at less than 150 psi.

B. Slowly fill each valved section of the waterline with water. Before applying the required test pressure, expel all air from the waterline. If hydrants, blowoffs, or air release valves are not available at high points in the waterline, make the necessary taps to expel the air and insert plugs once the test has been completed.

C. Apply required test pressure using pumps, piping, gages, and all other apparatus. Should the waterline fail the pressure test, locate and replace the defective materials and repeat the pressure tests until the waterline meets the requirements of this section.

3.03 WATERLINE LEAKAGE TEST

A. Leakage test shall be performed in accordance with AWWA C600. The leakage test shall be performed concurrently with the waterline pressure test described in the previous section.

B. Leakage is defined as the amount of water which must be supplied to the newly installed waterline in order to maintain the specified leakage test pressure after the line has been filled with water and the air expelled.

C. The leakage test shall be conducted by measuring, through a calibrated meter, the amount of leakage concurrent with the pressure test. Should the waterline fail the leakage test, locate and replace the defective materials and repeat the leakage test until the waterline meets the requirements of this section.

D. The allowable leakage shall not exceed the values presented in the following table:

Allowable leakage at various pressures Allowable leakage per 1000 ft of pipe* (Gallons per Hour) / Nominal pipe diameter (Inches)												
Test Pres PSI	**2**	**3**	**4**	**6**	**8**	**10**	**12**	**14**	**16**	**18**	**20**	**24**
300	.26	.39	.52	.78	1.04	1.30	1.56	1.82	2.08	2.34	2.60	3.12
275	.25	.37	.50	.75	1.00	1.24	1.49	1.74	1.99	2.24	2.49	2.99
250	.24	.36	.47	.71	0.95	1.19	1.42	1.66	1.90	2.14	2.37	2.85
225	.23	.34	.45	.68	0.90	1.13	1.35	1.58	1.80	2.03	2.25	2.70
200	.21	.32	.43	.64	0.85	1.06	1.28	1.48	1.70	1.91	2.12	2.55
175	.20	.30	.40	.59	0.80	0.99	1.19	1.39	1.59	1.79	1.98	2.38
150	.19	.28	.37	.55	0.74	0.92	1.10	1.29	1.47	1.66	1.84	2.21

*For mechanical or push-on pipe with 18-foot nominal lengths. To obtain the allowable leakage for 20-foot nominal lengths, multiply the leakage shown in the table by 0.09. When testing against closed metal-seated valves, an additional leakage per closed valve of 0.078 gal/hr/in of nominal valve size shall be allowed.

3.04 DISINFECTION OF WATERLINES

A. Disinfection of waterlines shall be performed in accordance with AWWA C651. Chlorine shall be introduced into the newly installed waterline to produce a minimum concentration of 50 mg/l throughout the waterline. AWWA approved HTH granules shall be placed at the upstream end of the first new pipe section, at the upstream end of each branch main, and at 500 ft. intervals. The following table shows the chlorine required to produce a 50 mg/l concentration:

CHLORINE REQUIRED TO PRODUCE A 50 MG/L CONCENTRATION IN 100 FEET OF PIPE BY DIAMETER		
PIPE SIZE (INCHES)	**100% CHLORINE (POUNDS)**	**1%CHLORINE SOLUTION (GALLONS)**
2	0.015	0.20
4	0.027	0.33
6	0.061	0.73
8	0.108	1.30
10	0.170	2.04
12	0.240	2.88
16	0.428	5.12
20	0.680	8.00
24	0.980	11.52

B. The chlorinated water shall be retained in the lines for a minimum of 24 hours. During the 24-hour period, all valve, hydrants and blow-offs shall be operated. After 24 hours, the chlorine concentration shall be a minimum of 25 mg/l. If the chlorine concentration is less than 25 mg/l, then the disinfection process shall be repeated.

C. When installation is complete, construct a temporary flushing connection from the source water hydrant/tap and a blow off connection/sampling port at the downstream end of the new main. Check all connections for tightness. From the source hydrant/tap, slowly fill the line to full line pressure with the appropriate backflow device to ensure no contamination of the source water. All hydrants and valves shall be operated at this time and all hydrants shall be bagged "out of service" until bacteriological samples are taken. The hydrants are to be exercised (opened and closed) with the caps tightly secured closed.

D. Flush the chlorinated water from the new main while sampling for residual chlorine. Continue flushing and sampling until the residual chlorine concentration is in the normal range for the water system (lower than 2.0 mg/L) and clear of any signs of air. Water loss to be accounted for by City Inspector.

E. After 24 hours, sample the water from the main and test for residual chlorine. The

concentration must be at least 10 mg/L. After the chlorine retention process has been completed, the chlorinated water shall be flushed to achieve chlorine residual between 1.0 and 2.0 mg/l. Flushing of the highly chlorinated water shall only be done where adequate drainage is available to allow the chlorine concentration to dissipate to a level which does not cause any harm to the environment. If this cannot be achieved, then the Contractor shall provide at his expense the necessary dechlorination equipment and provide sampling to ensure that dechlorination is achieved. Dechlorination shall be provided at the discretion of the Project Manager or Project Inspector. Water loss to be accounted for by City Inspector.

F. Flushing of waterlines shall be performed in a manner to achieve a minimum velocity of 2.5 fps. The following table provides flow rates required for pipe diameters in order to achieve minimum velocities:

REQUIRED FLOWS (GPM) TO ACHIEVE MINIMUM FLUSHING VELOCITY OF 2.5 FPS BY PIPE DIAMETER	
PIPE SIZE (INCHES)	**FLOW (GPM)**
2	25
4	100
6	225
8	400
10	620
12	900
16	1600
20	2500
24	3500

3.05 BACTERIOLOGICAL SAMPLING

A. After dechlorination, the temporary connection to the source water must then be closed and left undisturbed for 48 hours before bacteriological testing may be performed.

B. Bacteriological sampling of waterlines shall be performed in accordance with AWWA standards and guidelines and/or State regulations pertaining to the testing of new line installations/replacements. After disinfectant procedures have been performed, and the line tests for chlorine residuals within the normal operating range for the distribution system, the line must be left undisturbed for a period of 48 hours before the initiation of bacteriological testing. Samples are to be taken at the beginning, ending, ending of every branch and every 2500’ feet along the newly installed line (State reg. 1200-5-1). Test ports must be accounted for at each of the described locations. The City Inspector shall initiate the collection of samples for

bacteriological analysis.

3.06 CLEANUP

A. The contractor shall maintain all areas within the project in a neat manner. Once each area is of new waterline is completed, the contractor shall immediately grade and smooth over the work area and remove all debris. The contractor at the request of the Project Manager or Project Inspector shall perform final cleanup work (seeding, paving, etc.) within a timeframe specified.

3.07 MEASUREMENT AND PAYMENT – WATERLINE

A. Waterline shall be measured by the linear foot of pipe installed, tested, disinfected and accepted including trenching, foundation, bedding, initial backfill, final backfill per Section 31 23 33, fittings (unless otherwise specified), thrust blocking, Megalugs, restrained joints, and tracing wire, when required. Waterline installed in connection with boring, jacking, creek or aerial crossings, and encased or tunnel shall be measured for payment in Section 31 74 24, 33 05 10, or 33 05 23.

B. When provided for on the Bid Form, waterline as above stipulated shall be paid for at the Contract unit price per linear foot for the various sizes and classifications shown on the Bid Form. When not provided for on the Bid Form, payment for the waterline shall not be made directly, but shall be included in the payment for the items with which it is associated.

3.08 MEASUREMENT AND PAYMENT – VALVES, HYDRANTS, AND SERVICE ASSEMBLIES

A. Valves, hydrants, and service assemblies shall be measured by the number installed, tested, disinfected, and accepted including trenching, backfill, fittings (unless otherwise specified), Megalugs, restrained joints, and thrust blocking.

B. When provided for on the Bid Form, valves, hydrants and service assemblies, as above stipulated, shall be paid for at the Contract unit price per each for the various sizes and classifications shown on the bid form. When not provided for on the Bid Form, payment for valves, hydrants, and service assemblies shall not be made directly, but shall be included in the payment for the items with which it is associated.

3.09 MEASUREMENT AND PAYMENT – FITTINGS (SPECIALLY CALLED FOR ON THE BID FORM)

A. Waterline fittings shall be measured for payment only when specially called for on the Bid Form and shall be measured by the number and type of each installed, tested and accepted.

B. When provided for on the Bid Form, fittings, as above stipulated, shall be paid for at the Contract unit price per pound, as listed in accepted reference literature on the fittings used. This weight shall not include Megalugs, flanges, bolts, nuts, or any appurtenance other than the fitting itself. When not provided on the Bid Form, payment for fittings shall not be made directly, but shall be included in the payment for the items with which it is associated.

END OF SECTION

SECTION 33 30 00

SANITARY SEWERAGE SYSTEMS

PART 1 GENERAL

1.01 WORK INCLUDED

A. Installation of sanitary sewerage systems.

1.02 RELATED WORK

A. Specified elsewhere:

1. Section 03 30 00: Concrete Work
2. Section 31 23 33: Trenching, Backfilling and Compaction
3. Section 31 25 13: Soil and Erosion Control
4. Section 31 25 23: Rip-Rap
5. Section 33 05 23: Boring and Jacking
6. Section 33 05 10: Separation of Piped Utilities

PART 2 PRODUCTS

A. Force main products shall be same as water distribution systems Section 33 11 00. A #14 bare copper tracer wire and a warning tape, or other proven metallic detection device shall be placed with, attached to, or over all non-metallic piping in the trench to provide a means of detection. The detection device shall be of sufficient size and type to be located by any standard metal detector or pipe finder.

2.01 POLYVINYL CHLORIDE PIPE AND FITTINGS (GRAVITY SEWERS)

A. Manufactured from virgin, National Sanitation Foundation (NSF) approved resin conforming to ASTM D-1784.

B. Unless otherwise specified, all PVC pipe and fittings shall conform to ASTM D-3034 and have a Standard Dimension Ratio (SDR) of 35.

C. The gaskets used for joining PVC sewer pipe shall conform to ASTM F-477.

D. All PVC gravity sewer pipe shall be clearly marked with the manufacturer's name, nominal diameter, SDR, ASTM D-3034, and NSF approval seal.

2.02 DUCTILE IRON PIPE AND FITTINGS (GRAVITY SEWERS)

A. Pipe:

1. Manufactured in accordance with ANSI A-21.50 (AWWA C-151) and ANSI A-21.10 (AWWA C-110).
2. A cement lining meeting the requirements of ANSI 21.4 (AWWA C-104).
3. A minimum of 1 mil. thick bituminous coating on the outside surface.
4. Clearly mark with manufacturer's name, D.I., or Ductile, weight, class or nominal thickness, and casting period.
5. Unless otherwise specified or shown on the plans, ductile iron pipe shall be Class 50 for 200 psi working pressure.

B. Fittings (GRAVITY SEWERS):

1. Fittings 4" - 24": Pressure rated at 350 psi
2. Fittings 30" - 36": Pressure rated at 250 psi
3. Joints meeting the requirements of ANSI A-21.11 (AWWA C-111).

2.03 CONCRETE MATERIALS

A. Class "A" in accordance with Section 03 30 00.

2.04 CASTINGS FOR FRAME AND COVERS

A. Gray iron, Class 30, unless otherwise specified, meeting AASHTO M-108.

B. Cleaned and coated with bituminous paint which produces an acceptable finish that is not affected by exposure to hot or cold weather.

C. Rings and covers for use on watertight manholes shall be machined to a smooth uniform bearing which provides a watertight seal.

D. Manhole rings and covers for standard manholes shall be J. R. Hoe & Sons MC-375, or approved equal, and for watertight manholes shall be MC-375 watertight, or approved equal.

E. Manhole - castings to have anchor holes.

2.05 PRECAST MANHOLES

A. AASHTO M-199 SR or ASTM C-478; precast bases shall be acceptable, unless otherwise specified herein or noted on the Plans.

B. Openings shall be provided for the required number and size pipes and shall be

marked to insure installation at proper locations.

C. Use premolded rubber or approved bitumastic gaskets at all joints between sections in sanitary sewer manholes.

D. Precast manholes to have 1/2" diameter bolt inserts to anchor casting to manhole, this includes rings also.

2.06 MANHOLE STEPS

A. ASTM C-478.

B. Cast Iron Steps: ASTM A-48, Class 30.

C. Aluminum Steps: fabricated from aluminum alloy 6061, T6.

D. Manhole steps shall be corrosion resistant, free from sharp edges, burrs, or other projections which may be a safety hazard and shall be of sufficient strength to withstand a live load of 300 pounds imposed at any point.

E. The minimum width of cleat shall be 10 inches.

F. The legs and struts shall be of sufficient length for the cleat to project a minimum clear distance of 4 inches from the wall when the step is securely imbedded in the manhole wall.

G. The top surface of the cleats shall be designed to prevent foot slippage.

2.07 PIPE ENTRANCE COUPLINGS FOR MANHOLES

A. For pipe diameters 12 inches and smaller: ASTM C-923.

B. Where flexible pipe is used, the rigid manhole entrance coupling shall meet ASTM C-428 and ASTM D1869.

C. Other specially designed flexible products such as "KOR-N-SEAL" may be approved where available and where materials meet the requirements of ASTM C-923.

2.08 AIR RELEASE VALVE AND COMBINATION AIR RELEASE INSTALLATIONS

A. Air Release Valves: These shall be APCO No. 400 WA Short Version, Val-Matic Model 48, Crispin Model S20, or equal sewer type, 2" size, LESS back-flushing accessories.

1. Provide an air release valve at each indicated and/or authorized high point in force mains, connected to force main with stainless steel pipe with bronze rising stem gate valve between release valve inlet and force main, all enclosed in a precast concrete manhole with cast iron manhole rim and cover, as detailed on drawing entitled DETAIL AIR RELEASE VALVE. Manhole shall conform to all applicable requirements of MANHOLES, hereinafter.

B. Combination Sewage Air Valve: These shall be APCO, Crispen, or equal LESS back-flushing accessories with model number as indicated below:

Combination Sewage Air Valve	APCO Model #	Crispin Model #
2" Air Release Valve/1" Air & Vacuum Valve	401WA/400WA	-
2" Air Release Valve/2" Air & Vacuum Valve	402WA/400WA	520A
2" Air Release Valve/3" Air & Vacuum Valve	403WA/400WA	530A
2" Air Release Valve/4" Air & Vacuum Valve	404WA/400WA	541A
2" Air Release Valve/6" Air & Vacuum Valve	406WA/400NA	561A

1. Provide a combination sewage air valve at each indicated and/or authorized high point in force mains, connected to force main with stainless steel pipe with bronze rising stem gate valve between the air and vacuum valve inlet and force main, all enclosed in a precast concrete manhole with cast iron manhole rim and cover, as detailed on drawing entitled DETAIL COMBINATION SEWAGE AIR VALVE. Manhole shall conform to all applicable requirements of MANHOLES, hereinafter.

PART 3 EXECUTION

3.01 PREPARATION - GRAVITY SANITARY SEWERS

A. Prior to laying pipe, prepare a suitable bedding according to Section 31 23 33.

B. Before placing pipe in the trench, field inspect for cracks or other defects; remove defective pipe from the construction site.

C. Swab the interior of the pipe to remove all undesirable material.

D. Prepare the bell end and remove undesirable material from the gasket and gasket recess.

3.02 INSTALLING GRAVITY SANITARY SEWERS

A. Lay pipe true to the lines and grades from the grade and alignment stakes, or equally usable references, as provided by the City Engineer or his agent.

1. Where laser equipment is used, check grade between sections against offset

hubs at every manhole location.

2. Where batter boards are used, check against furnished stakes at intervals of 50 feet along the route of the pipeline.
3. Provide and use accurately set batter boards at each 50 foot interval in establishing the bottom invert of each pipe laid.

B. Accurately establish the centerline of each pipe using a string stretched between targets and a plumb line extended to the centerline of the pipe.

C. Carefully inspect all pipe and each fitting prior to its placement in the trench, and reject and remove any defective pipe or fittings from the job site.

D. Lay pipe progressively up grade, with bell upstream in such a manner as to form close, concentric joints with smooth bottom inverts. Joining of all pipe shall be in accordance with manufacturer's specifications.

E. Bed each pipe section in accordance with Section 31 23 33.

F. Unless otherwise specified, provide all gravity sewer lines with a minimum of 4 feet of cover in roadways and 2-1/2 feet of cover in open areas, unless ductile iron pipe or concrete encasement is used.

G. Do not allow walking on completed pipelines until backfill has been placed to a depth of at least 6 inches above the crown of the pipe.

H. Keep the interior of the pipe free of all unneeded material, and upon completion of a section between any two manholes it shall be possible to view a complete circle of light when looking through the pipe.

I. When pipe laying ceases, close the open ends of the pipe with a pipe cap for preventing the entrance of foreign materials.

J. Couplings and adapters used for joining dissimilar pipe materials, for repairing and rejoining sections of gravity sewer, and for connecting the first full joint of pipe to a short stub through a manhole wall shall meet the requirements of ASTM C-594.

K. All couplings and adapters shall be of rubber, plastic and metallic materials which will not be attacked by municipal wastewaters or aggressive elements in the soil, and shall conform to ASTM C-425, Section 5.

L. In order to restore the construction zone to its original condition as much and as soon as is reasonably possible, the project is to be divided into segments as shown on the Plans or as directed by the City Engineer or his agent. When pipe laying within any segment is complete, all work under this contract and to be done in that segment, including but not limited to manholes, pipe, lateral assemblies, landscaping, and testing of these items and correction of all deficiencies shall be

completed before pipe laying begins in any other segment. It is not the intention of these specifications to dictate the order in which work must proceed, only to insure prompt restoration of the construction zone. Refer to Section 31 25 13, Soil and Erosion Control.

M. Sewers in Relation to Streams

1. Location of Sewers in Streams
   a. One (1) foot of cover (concrete) is required where the sewer is located in rock.
   b. Three (3) feet of cover is required in stabilized stream channels.
   c. Seven (7) feet of cover or more is required in shifting stream channels.

2. Sewers located along streams shall be located outside of the stream bed and sufficiently removed therefrom to minimize disturbance or root damage to streamside trees and vegetation.
3. Sewer outfalls, headwalls, manholes, gateboxes or other structures shall be located so they do not interfere with the free discharge of flood flows of the stream.
4. Sewers crossing streams shall be designed to cross the stream as nearly perpendicular to the stream flow as possible and shall be free from change in grade.

N. Construction

1. Sewers entering or crossing streams shall be constructed of ductile iron pipe with mechanical joints, concrete encased, or shall be so otherwise constructed that they remain watertight and free from changes in alignment or grade. Sewer systems shall be designed to minimize the number of stream crossings. The construction methods which minimize siltation shall be employed. Refer to Section 31 25 13, Soil and Erosion Control. Upon completion of construction, the stream shall be returned as near as possible to its original condition. The stream banks shall be seeded, planted or other erosion prevention methods employed to prevent erosion. Stream banks shall be sodded if necessary to prevent erosion. Where tree canopy has been removed, replacement trees shall be planted of natural species. The City Engineer or his agent shall specify the specific method or methods to be employed in the construction of the sewers in or near the stream to control siltation.
2. During construction of sewerage projects, the contractor shall be prohibited from unnecessarily disturbing or uprooting trees and vegetation along the stream bank and in the vicinity of the stream, dumping of soil and debris into streams and/or on banks of streams, changing course of the stream without encroachment permit, leaving cofferdams in streams, leaving temporary stream crossings for equipment, operating equipment in the stream, or pumping silt-laden water into the stream.

3. Provisions shall be made to retard the rate of runoff from the construction site and control disposal of runoff including liberal use of silt fencing, to trap sediment resulting from construction in temporary or permanent silt holding basins, including pump discharges resulting from dewatering operations; to deposit out of the flood plain area all material and debris removed from the stream bed.
4. Uncased borings are not permitted under streams.
5. Contractor shall cleanup, grade, seed, plant, or restore the work area as early as practical as the construction proceeds.

O. Special Construction Requirements

1. Special design requirements shall be employed to prevent stream drainage from sinking at the crossing and following along the sewer pipe bedding. This can be accomplished with an in-trench impounding structure of compacted clay. Other proposals may be considered.

P. Aerial Crossings

1. Sewers constructed on piers across ravines or streams shall be allowed when it can be demonstrated that no other practical alternative exists or local knowledge or in the design Engineer's judgment other methods are not as reliable.
2. Support shall be provided for all joints. All supports shall be designed to prevent frost heave, overturning or settlement. Precautions against freezing such as insulation or increased slope shall be provided. Expansion jointing shall be provided between above-ground and below-ground sewers. The impact of flood waters and debris shall be considered. The bottom of the pipe should be placed no lower than the elevation of the 50 year flood plain.

Q. Permits

It is the owner's responsibility to obtain all necessary permits along streams or rivers, i.e. Corps of Engineers, TVA, Natural Resources Section of the Division of Water Pollution Control, and an Aquatic Resource Alteration Permit.

R. Slope

1. All gravity sewers shall be designed and constructed to give mean velocities, when flowing full, of not less than 1.0 feet per second.
2. Sewers shall be laid with uniform slope between manholes.
3. Sewers on 18% slope or greater shall be anchored securely with concrete anchor, or equal, spaced as follows:

   a. Not over 36 feet center to center on grades 18% and up to 25%.

b. Not over 24 feet center to center on grades 25% and up to 35%.

c. Not over 16 feet center to center on grades 35% and over.

S. Alignment

1. Gravity sewers shall be designed with straight alignment between manholes. However, curved sewers may be approved where circumstances warrant, but only in (i.e., 36 inches and larger) gravity sewer segments.

T. High Velocity Protection

1. Where velocities grater than 15 feet per second are expected, special provision shall be made to protect against internal erosion or displacement by shock as directed by City Engineer or his agent.

3.03 INSTALLING FORCE MAINS

A. Paragraphs C, D, E, G, H, I, J, K, L, M, N, O, P, Q for installing gravity sanitary sewers, 3.02, and 2.10 (Air/Vacuum Release Valves), above, shall be followed in installation of force mains.

B. Do not "snake" pipe in trenches.

C. Do not "buckle in" any pipe without approval.

D. Secure each turn and junction in force mains by pouring concrete blocking between firm trench walls and the unbalanced sides of fittings. In the case of ductile iron force main, mechanical joints fittings, and ductile iron setscrew type retainer glands with setscrews properly tightened may be substituted for the concrete blocking.

E. Force mains shall be sufficiently anchored within the pump station and throughout the line length. The number of bends shall be as few as possible. Thrust blocks, restrained joints, and/or tie rods shall be provided where restraint is needed.

3.04 INITIAL PROOF TESTING OF SANITARY SEWERS

A. It is the intent to specify a "test as you go" procedure in order to establish confidence in the installation and avoid the unnecessary delay of final acceptance.

B. Before a reach of pipeline is approved for partial payment, successfully proof test that reach for grade, alignment and cleanliness.

C. In the event that four or more reaches fail to satisfactorily pass proof testing procedures, cease pipe laying until deficiencies are identified and corrected.

D. The basis for grade, alignment and cleanliness testing shall be visual inspection.

E. Proof test flexible pipeline installation for deflection by pulling a "go-no-go" test mandrel through the line after the initial backfill is complete to avoid unnecessary digups.

F. Where SDR35 PVC pipe is used (Section 33 30 00) a mandrel shall be used to test for deflection of the pipe after installation and testing of the pipe. The mandrel shall be equal in shape and size to the one depicted in the attached sketch. Any section of PVC pipe installed as part of this project through which the mandrel does not easily pass shall be immediately removed and replaced. The test cycle shall then be repeated.

3.05 FINAL TESTING - GRAVITY SANITARY SEWERS

A. Before the job is accepted and before any house services are connected, a final testing procedure is to be followed on each manhole-to-manhole section from inlet(s) of upstream manhole to inlet of downstream manhole.

B. Perform a visual inspection when groundwater levels are above the pipeline if possible. All visible leaks shall be repaired.

C. The leakage test shall be conducted with <u>all</u> lines connected (including lateral lines).

D. No lateral is to be sealed off during testing, except for a plug at its upstream end, including any lateral connected to a manhole.

E. If there is evidence of infiltration, all leaks shall be located and corrected.

F. The Contractor shall conduct an air or water exfiltration test on each section of sewer installed.

G. If flexible pipe is used, pull an approved go-no-go deflection mandrel of 95/100 pipe diameter through all reaches of gravity sewer main. No sections shall be accepted which exhibit a deflection of more than 7.5%. This test may not be conducted sooner than 24 hours after placing final backfill.

H. TV inspection performed by the City Engineer or his agent may be used to determine acceptability of pipe installation. All defects located shall be repaired before final acceptance of pipe.

3.06 WATER EXFILTRATION TEST - GRAVITY SEWERS

A. In the presence of the City Engineer or his agent, watertight bulkhead shall be placed in the inlet to the downstream manhole of the section to be tested.

B. The upstream manhole shall be fitted with a watertight bulkhead modified for a 9.0 foot high stand pipe which shall be used to test and fill the sewer line with water.

C. Within 24 hours of filling the test section, the water level in the test stand pipe shall be monitored by the City Engineer or his agent for a period of 30 minutes. Water level is to be maintained 8'.0" above the top (crown) of the sewer main by adding measured quantities of water if necessary. The total volume of exfiltration shall be determined from the net drop in water level and the volume of water added during the 30 minute test period.

D. If the measured exfiltration does not exceed 25 gallons/day/inch/mile of pipeline the section shall be approved for leakage.

E. Any section of pipeline in which the measured exfiltration is in excess of 25 gallons/day/inch/mile shall not be accepted and all leaks shall be located and corrected.

F. Vacuum testing of sanitary sewer manholes shall be performed per Section 33 30 00.

3.07 LOW PRESSURE AIR EXFILTRATION TEST - GRAVITY SEWERS

A. All piping shall be tested in accordance with ASTM C-828 to test pipe. Calculate the pressure drop as the number of minutes for the air pressure to drop from a stabilized pressure of 3-1/2 to 2-1/2 PSIG.

B. Times for mixed pipe sizes of varying lengths should be calculated as described in ASTM, C828-76T using formula $t = k\ d/q$ ($q = .0020$).

C. The following times are for one pipe size only:
Minimum Test Time for Various Pipe Sizes (Based upon ASTM C828-80)

Nominal Pipe Size, in.	T(time) min/100 ft.	Nominal Pipe size, in.	T(time) min/100 ft.
3	0.2	21	3.0
4	0.3	24	3.6
6	0.7	27	4.2
8	1.2	30	4.8
10	1.5	33	5.4
12	1.8	36	6.0
15	2.1	39	6.6
18	2.4	42	7.3

3.08 FINAL TESTING - FORCE MAIN

A. After the pipe has been laid, subject all newly laid pipe or any valved section thereof to a hydrostatic pressure of at least 1.5 times the working pressure at the point of testing.

B. Test Pressures shall:

1. Not be less than 1.50 times the working pressure at the highest point along the test section.
2. Not exceed the pipe or thrust restraint design pressures.
3. Be of at least 30 minutes of duration.
4. Not vary by more than $\pm$ 5 psi
5. Not exceed twice the rated pressure of closed valves in the test section.

C. Pressure Tests - Force Main

1. All force mains shall be tested at a minimum pressure of at least 50 % above the design operating pressure for at least 30 minutes. Leakage shall not exceed the amount given by the following formula:

$$L = \frac{ND(P)^{0.5}}{7400}$$

Where L is allowable leakage in gallons per hour
N is the number of pipe joints
D is the pipe diameter in inches
P is the test pressure in psi

D. Pressurization

1. Slowly fill each valved section of pipe with water.
2. Apply the specified test pressure, based on the elevation of the lower point of the line or section under test and correct to the elevation of the test gauge by means of a pump connected to the pipe in a manner satisfactory to the City Engineer or his agent.

E. Air Removal

1. Before applying the specified test pressure, expel air completely from the pipe and valves.
2. If permanent air vents are not located at all high points, install corporation cocks at such points to expel air as the line is filled with water.
3. After all the air has been expelled, close the corporation cocks and apply the test pressure.

F. Examination

1. Carefully examine all exposed pipe, fittings, valves, hydrants, and joints for leaks.
2. Repair or replace any damaged or defective pipe, fittings, or valves that are discovered with sound material and repeat the test until it is satisfactory to the City Engineer or his agent.

3.09 SEWER MANHOLES - GENERAL

A. Unless otherwise specified, all manholes shall have an inside diameter of not less than 4 feet and a vertical wall height of not less than 2.5 feet.

B. The clear opening in the manhole shall be not less than 2.0 feet.

C. Depth of the manhole shall be the vertical distance from the lowest invert in the manhole to the base of the ring.

D. The first sections of pipe entering and leaving the manhole shall be a maximum of 2 ft. in length.

1. All pipes entering or exiting manholes shall have flexible boots conforming to ASTM C-594.
2. Lay these sections of pipe in a bed of Class I material.
3. Use non-shrink grout on pipes or couplings through manhole walls.

E. Apply two applications of bituminous material to the outside of each manhole section prior to backfilling.

F. Backfill manholes with the same material used for pipelines.

G. Anchor bolt inserts to anchor casting to manhole.

H. Vacuum Testing of Manholes

1. Each manhole shall be tested immediately after assembly and prior to backfilling.
2. All lift holes shall be plugged with an approved non-shrink grout or an acceptable sealant.
3. All pipes entering the manhole shall be plugged, taking care to securely brace the plug from being drawn into the manhole.
4. The test head shall be placed at the inside of the top of the cone section and the seal inflated in accordance with the manufacturer's recommendations.
5. A vacuum of 7 to 10 inches of mercury shall be drawn and the vacuum pump shut off. With the valves closed, the time shall be measured for the vacuum to drop to 6 to 9 inches. The manholes shall pass if the time is greater than 60 seconds for 48" diameter, 75 seconds for 60" diameter manholes, and 90 seconds for 72" diameter manholes.
6. If the manhole fails the initial test, necessary repairs shall be made with a non-shrink grout or an acceptable sealant. Retesting shall proceed until a satisfactory test is obtained.

3.10 STANDARD PRECAST CONCRETE MANHOLES

A. ASTM C478.

B. The base of the manhole shall be Class B concrete not less than 8 inches in depth with inverts not less than 4 inches in depth.

C. Shape manhole inverts from Class B concrete to be smooth, accurately shaped, and in accordance with the Plans.

D. Inlets and outlets from each manhole shall be finished smooth and flush with the sides of the manhole walls so as not to obstruct the flow of liquid through the manhole.

E. When possible, the base of the manhole shall be poured on dry, consolidated and undisturbed soil.

F. When wet or unconsolidated material occurs or when over-excavation of the base occurs, provide a sub-base with a minimum of 12 inches of Class I, granular material, well compacted with mechanical tamping equipment.

G. When completed, the manhole shall be free from channel obstructions and leakage.

H. Seal joints between sections with a rubber 0-ring or "RAM-NEK" gasket as shown on the Plans.

3.11 "CAST-IN-PLACE" CONCRETE MANHOLES

A. Manholes shall conform to the dimensions outlined on the plans.

B. The vertical forms, wall spacers, steps and placing cone must be carefully positioned and firmly clamped in place before any placement is made.

C. The wall spacers must be located 90 degrees from each other.

D. Use Class "A" concrete with a maximum slump of 4 inches per Section 03 30 00.

E. First place approximately 1/2 yard of concrete evenly around the walls and vibrate until there is a minimum slope of 60 degrees from the bottom of the forms to the bearing surface both inside and outside of the manhole.

F. When this is complete and before additional concrete is added, vibrate the concrete on each side of each pipe.

G. Deposit additional concrete in evenly distributed layers of about 18 inches with each layer vibrated to bond it to the proceeding layer.

H. Raise the wall spacers as the placements are made, with the area from which the spacer is withdrawn being carefully vibrated.

I. Excessive vibration is to be avoided.

J. A maximum of 2% Calcium Chloride may be added to the concrete, at the Contractor's option, to speed the set.

K. Remove the forms as soon as the concrete has sufficiently set, but not within 6 hours of pouring and not without approval.

L. Excessive honeycombs shall be cause for rejection of the manhole. Honeycombs and other imperfections shall be mortared as soon as possible after form removal so that a proper bond takes place.

M. Form marks and offsets of up to 1" shall be permitted on the outside surface of the manhole.

N. Form marks and offsets up to 1/2" shall be permitted inside of the manhole.

O. All offsets on the inside surface of the manhole shall be smoothed and plastered so there is no projection or irregularity capable of scratching a worker or catching and

holding water or solid materials.

P. Honeycomb shall be plastered with mortar, consisting of three parts of masonry sand to one part portland cement, immediately upon removal of the forms.

3.12 MANHOLE STEPS

A. Set manhole steps at intervals of 15 inches along the wall of the manhole.

B. The treads of the steps shall be free from mortar or other material when the manhole is completed.

C. In precast manholes, the holes left to receive the steps shall be mortared smooth following placement of the steps.

3.13 MANHOLE RINGS AND COVERS

A. Grout manhole rings and covers in place with cement mortar.

B. The bearing surfaces between cast rings and covers shall be machined, fitted together, and match marked to prevent rocking.

C. All castings shall be of the types, dimensions, and weights as shown on the Plans and shall be free of faults, cracks, blow-holes, or other defects.

3.14 DROP MANHOLE ASSEMBLIES

A. Drop manhole assemblies shall be constructed as outlined on the plans.

B. The material used in the drop pipe construction shall be the PVC SDR 35, concrete, or ductile iron and Class "A" concrete.

3.15 SEWER LATERAL ASSEMBLIES

A. Where shown on the plans or located in the field, install fittings for individual lateral assemblies.

1. The standard collector tap shall consist of a "tee-wye" connected with a 6 inch diameter branch.
2. Use vertical risers when the depth of the collector line is greater than 8 feet or when their use facilitates connection of individual services.
3. Plug the ends of all branches not to be used immediately with pipe caps of the same material and joints used.
4. Provide a standard 6" cleanout at the end of each sewer lateral set flush with the finished grade with a cast iron box. Cleanouts shall have a cast iron box per Detail A3.4.

B. Where shown on the plans or located in the field, connect sewer laterals to the sewer mains through a "tee-wye" fitting. If a lateral is added in the field after the sewer main is installed, connect to sewer main through a saddle attached to the sewer main by stainless steel bands secured by 2 bronze or stainless steel bolts, with a minimum diameter of 3/8".

C. Lateral pipe shall be a minimum 6" diameter and shall be installed as shown on the Plans.

1. Plug upstream the ends of lateral pipe and cover the same as for collectors and interceptors (where possible).
2. The minimum grade on service pipes shall be 1.5% or 3/16" per foot.

D. Lateral pipe is to be extended such that the upstream end is approximately 4' below finished surface or 6' below the lowest floor elevation as determined by the City Engineer or his agent for the structure to be served, whichever is lower in elevation.

E. The location of the upstream end of each lateral assembly is to be marked for future connection as follows:

1. A #3 steel bar approximately 18 inches long is to be buried in an upright position directly above the plugged end of the assembly. This is to be done during the final backfill operation in such a manner that the top of the bar is 1' to 2' below finished ground surface.
2. A nominal 2" x 2" wolmanized or salt treated wooden stake is to be driven to a depth of 2' immediately adjacent to the bar, such that approximately 1' is exposed above finished ground surface.

3.16 MEASUREMENT AND PAYMENT - GRAVITY SEWER PIPE

A. Sewer pipe of the various sizes shall be measured by the linear foot of pipe installed, tested, and accepted.

1. Gravity sewer pipe for creek crossings or aerial crossing shall not be paid for directly, but shall be paid for as a unit cost of the work it is associated with and defined as that part of the crossing plus five feet of piping on each side of the creek or ditch banks.

B. If provided for on the Bid Form, sewer pipe passing final test and accepted shall be paid for in full at the Contract unit price per linear foot for sewer pipe of the various sizes and material classifications. In estimating monthly progress payments, sewer pipe installed and passing initial proof tests, but not passing final test and not accepted, shall be paid for at 90% of the Contract unit price per linear foot for sewer pipe of the various sizes and material classifications. If not provided for on the Bid

Form, payment for gravity sewer pipe shall not be made directly, but shall be included in the payment for the items with which it is associated.

1. Trenching, foundation, bedding, initial backfill, final backfill (unless otherwise specified - see Section 31 23 33), fittings (unless otherwise specified), anchors, blocking, metallic tape, disposal of spoil, testing, inspections, replacement of defective items, or other specified equipment shall not be paid for directly.

3.17 MEASUREMENT AND PAYMENT - FORCE MAIN

A. Force main shall be measured by the linear foot of pipe installed, tested and accepted.

1. Force mains for creek or aerial crossings shall not be paid for directly, but shall be paid for as a unit cost of the work it is associated with and defined as that part of the crossings plus 5 feet of piping on each side of the creek or ditch bank.

B. If provided for on the Bid Form, force main passing final test and accepted shall be paid for at the contract unit price per linear foot for force main of the various sizes and material classifications. In estimating monthly progress payments, force main installed and passing initial proof tests but not passing final test and not accepted shall be paid for at 90% of the contract unit price per linear foot for force main of the various sizes and material classifications. If not provided for on the Bid Form, payment for force main shall not be made directly, but shall be included in the payment for the items with which it is associated.

1. Trench, foundation, bedding, initial backfill, final backfill (unless otherwise specified - see Section 31 23 33), fittings (unless otherwise specified) anchors, blocking, metallic tape, disposal of spoil, testing, inspections, replacement shall not be paid for directly.

3.18 MEASUREMENT AND PAYMENT - FORCE MAIN AIR RELEASE VALVE

A. Force main air release valves shall be measured by the number installed, tested, and accepted, including concrete base, granular sub-base, granular fill, all brickwork or precast concrete sections, steps, castings, and release valve assembly including service clamp, and stainless steel pipe with bronze rising stem gate valve.

B. If provided for on the Bid Form, force main air release valves passing final test and accepted shall be paid for at the contract unit price per each for force main air release valves of the various size classifications. In estimating monthly progress payments, force main air release valves installed and passing initial proof tests but not passing final test and not accepted shall be paid for at 90% of the contract unit price per each for force main air release valves of the various size classifications. If

not provided for on the bid Form, payment for force main air release valve shall not be made directly, but shall be included in the payment for the items with which it is associated.

3.19 MEASUREMENT AND PAYMENT - STANDARD SEWER MANHOLES

A. Manholes shall be measured by the number installed, tested and accepted including concrete base, granular sub-base, poured concrete invert, all brickwork or precast concrete sections, steps and castings as shown on the Plans. A manhole 6'- 0" or less in depth from the top of the rim to the sewer invert shall be classified as a standard manhole.

B. If provided for on the Bid Form, standard manholes as above stipulated shall be paid for at the contract unit price per each. In estimating monthly progress payments, standard manholes passing proof test for grade, alignment, and cleanliness, but without lid or invert in place shall be paid for at 50% of the contract unit price per each; 20% of the contract unit price shall be added if lid in place; 20% of the contract unit price shall be added if invert in place and complete; and 10% of the contract unit price shall be added for standard manholes passing final test and accepted. If not provided for on the Bid Form, payment for standard sewer manholes shall not be made directly, but shall be included in the payment for the items with which it is associated.

3.20 MEASUREMENT AND PAYMENT - ADJUSTMENT OF EXISTING SEWER MANHOLES

A. Adjustment of existing manholes shall be measured by the number adjusted, tested, and accepted including new inlets and outlets, poured concrete invert, all brickwork or precast concrete sections, steps, and castings as shown on the Plans.

B. If provided for on the Bid Form, adjustment of existing manholes as above stipulated shall be paid for at the contract unit price per each. If not provided for on the Bid Form, payment for adjustment of existing manholes shall not be made directly, but shall be included in the payment for the items with which it is associated.

3.21 MEASUREMENT AND PAYMENT - EXTRA DEPTH MANHOLE

A. All manhole construction below the 6'- 0" depth of the standard manhole shall be classified as extra depth manhole. It shall be measured as the depth in feet, installed, tested, and accepted, including steps, from the top of the rim to the sewer invert, less 6'- 0".

B. If provided for on the Bid Form, extra depth manhole as above stipulated shall be paid for at the contract unit price per vertical foot. In estimating monthly progress payments, extra depth manhole installed in manholes passing proof test for grade,

alignment, and cleanliness, but not passing final test and not accepted shall be paid for at 90% of the contract unit price per vertical foot. If not provided for on the Bid Form, payment for extra depth manhole shall not be made directly, but shall be included in the payment for the items with which it is associated.

3.22 MEASUREMENT - MANHOLE CASTINGS

A. Manhole castings, except the watertight type, shall not be measured for payment, but shall be included in the unit price per manhole.

B. As above stipulated, manhole castings shall not be measured for payment, but shall be included in the unity price per manhole.

3.23 MEASUREMENT AND PAYMENT - WATERTIGHT MANHOLE CASTINGS

A. Watertight manhole castings shall be measured by the number installed and accepted.

B. If provided for on the Bid Form, watertight manhole castings as above stipulated shall be paid for at the Contract unit price per each installed and accepted. This payment shall be made in addition to the payment made for manholes, which includes standard castings. If not provided for on the Bid Form, payment for watertight manhole castings shall not be made directly, but shall be included in the payment for the items with which it is associated.

3.24 MEASUREMENT AND PAYMENT - MANHOLE DROP ASSEMBLIES

A. Drop assemblies shall be measured by the number installed, tested, and accepted, including drop pipes, fittings, Class "B" concrete and brickwork. (This item shall not include manhole construction).

B. If provided for on the Bid Form, drop assemblies as above stipulated shall be paid for the Contract unit price per each for the various depth classifications. If not provided for on the Bid Form, payment for manhole drop assemblies shall not be made directly, but shall be included in the payment for the items with which it is associated.

3.25 MEASUREMENT AND PAYMENT - SEWER LATERAL ASSEMBLIES AND PIPE

A. Lateral assemblies (fittings, clean outs, caps and accessories) shall not be measured for payment. Lateral pipe shall be measured by the linear foot of pipe installed, tested, and accepted from the centerline of the collection line to the stopping point without deductions for fittings, clean outs, or caps.

B. If provided for on the Bid Form, lateral pipe as above stipulated shall be paid for at the Contract unit price per linear foot for lateral pipe. If not provided for on the Bid Form, payment for lateral assemblies and pipe shall not be made directly, but shall be included in the payment for the items with which it is associated.

3.26 CONCRETE ENCASEMENT

A. Concrete for encasement of pipe shall be measured by the cubic yard actually specified or shown on the Plans, regardless of any excess placed by the Contractor.

B. If provided for on the Bid Form, concrete as above stipulated shall be paid for at the Contract unit price per cubic yard, which payment shall be compensation in full for furnishing and placing concrete and for all equipment and incidentals necessary for performance of the work as herein specified or shown on the plans. If not provided for on the Bid Form, payment for concrete encasement shall not be made directly, but shall be included in the payment for the items with which it is associated.

3.27 MEASUREMENT AND PAYMENT - CONCRETE ENCASEMENT CREEK CROSSINGS

A. Concrete for encasement of sewer mains or laterals at creek crossings are to be paid for as a unit for which it is associated with and shall not be a separate pay item.

END OF SECTION

SECTION 33 32 00

SANITARY SEWER PUMP STATIONS
WET WELL - DRY WELL PUMP STATION

PART 1 GENERAL

1.01 WORK INCLUDED

A. The General and Special Conditions shall apply to all work in this section.

1.02 RELATED WORK

A. Testing Adjusting and Final Operation

B. Specified elsewhere:

1. Section 03 30 00: Concrete
2. Section 26 05 00: Electrical Work
3. Section 27 00 00: Communications
4. Section 33 32 10: Air Scrubber

PART 2 PRODUCTS

2.01 WET WELL

A. General: Wet well shall be precast concrete type, constructed completely when the pipe laying reaches the wet well location.

B. Size of wet well shall be as detailed on plans.

C. Materials for wet well shall be:

1. Precast concrete sections, Top and Bottom. The structure shall be fabricated of monolithic precast concrete sections of dense water-tight concrete having a minimum 28 day compressive strength in excess of 5000 PSI as determined by testing in accordance with the latest standard ASTM test procedures. The units shall be designed and furnished to hold water free standing as well as to withstand earth backfill when installed below grade. All welded wire fabric shall conform to ASTM specification A-185. Deformed bars shall conform to ASTM specifications A-305, shall be provided throughout and also at all openings, edges and elsewhere as required for the intended service. Concrete ingredients shall conform as follows:

   a. Portland Cement, Type 2 per ASTM specification C-150(8 bags per cubic yard)

b. Aggregate, 1" to #4 per ASTM specification C-33

c. Sand, 2.35 fineness modules (free from organic matter)

d. Water, clean and suitable for domestic use (4.62 gallons per bag of cement)

e. Air, maximum 5% (entrained)

f. Honeycombed or retampered concrete shall not be acceptable

2. Straight sections shall be of the lengths required for wet well assembly; each precast section shall have tongue and groove joints, permanently imbedded-in wet well steps arranged to provide steps on 16" uniform vertical centers in the completed wet well, and imbedded-in lifting hooks on the outside of each section to facilitate handling and laying.
3. Gasket material for precast section joints: Kent-Seal No. 2 as manufactured by Hamilton Kent Mfg. Co., Stone Mountain, GA.: or Ram-Nek as manufactured by K.T. Snyder Co., Inc., Houston, Texas.
4. Wet well steps: Polypropylene plastic or corrosion-resistant rubber encased bent steel reinforcing bar type; PS-1 by M.A. Industries, Inc., East Point, GA; or "Sure Foot" by Oliver Tire And Rubber Co., Oakland, CA.
5. Wet well rim cover, non-watertight: cast iron heavy traffic pattern with covers marked SEWER, total weight at least 365 pounds, one of the following or equal; covers shall NOT have ventilating holes:

   a. J.R. Hoe and Sons Co., Middlesboro, KY., NO. MC-375

   b. Vulcan Foundry, Inc., NO. V1312

6. Wet well connections: An asbestos-cement coupling cast into the base, with a rubber ring seal against the pipe, shall be used in each entry to insure a surface for adherence of concrete to the wall; or in lieu of this, a soft (durometer 40-45) rubber ring water stop which is cast in base and stretched around pipe may be used.

2.02 PUMP STATIONS

A. General

1. Pumping unit shall be a packaged, cylindrical, dry pit, sewage pumping station as manufactured by DAVCO, Thomasville, Georgia or Smith AND Loveless, Division-Ecodyne Corporation, Lenexa, Kansas; or equal. See Pump Schedule on Plan Drawings for pump capacity and voltage required.
2. Pumping unit shall include: vertical close-coupled non-clog, centrifugal

sewage pumps with motor drives; dehumidifier; automatic dialing alarm monitoring; ventilation system; central control panel with circuit breakers; lighting; internal wiring; motor starters and automatic pumping level controls; heater; and internal piping, flow metering, and valves necessary for proper operation. Pumping unit shall be: completely factory assembled; factory tested; factory wired to a single electrical supply point; factory wired for future telemetry equipment to be furnished under a separate contract and ready for field installation on a concrete slab; field discharge and suction piping connection; field electrical supply connection.

B. Pump Chamber: The pump chamber shall be manufactured using a minimum thickness of 1/4 inch steel plate for the sides, and a minimum of 3/8 inch steel plate for the top and bottom. The bottom of the chamber shall be reinforced by I beams placed on the center lines of each pump suction line and extending one foot outside the chamber diameter. The top of the chamber shall be reinforced by channel beams. The steel plate and structural beams shall meet or exceed the requirements of ASTM specifications A-36.

1. The pump chamber shall have a minimum inside diameter and minimum clear inside height as shown on the drawings.
2. The plate and structural members shall be connected by welding. Welds shall be continuous where required to provide a water tight connection. All welds shall be in accordance with AISC and AWS specifications.

C. Entrance Tube: The entrance tube shall be provided by the manufacturer. The bottom of the tube shall be adequately reinforced so that it may be connected to the pump chamber in the field. The entrance tube shall be protected with minimum diameter and length as shown on the drawings. The entrance tube shall have a steel lid with a minimum thickness of 1/8 inch. The lid shall fit the entrance tube in a manner so as to prevent the entrance of water into the entrance tube.

D. Maintenance Lift: Furnish and Install within the pump station a pre-manufactured manway lift.

1. General: Maintenance lift shall be electrically operated type conforming to applicable OSHA requirements, rated load at least 500 pounds, 26, fpm speed, suitable for lowering and raising personnel into and out of the pumping station dry well. Maintenance lift shall be completed with car, guide rails, drive unit, chains, push button controls, limit controls, safety devices, and all necessary anchorage required to attach the equipment to the structure.
2. Structural Steel: This shall conform to applicable ASTM Specifications, with 36,000 psi MINIMUM yield strength, and its design and fabrication shall conform to applicable AISC and AWS Standards. Welding shall be performed by qualified and certified welding operators, all in accordance with applicable AWS Standards.
3. General Construction: Car assembly shall be constructed of structural steel

shapes bolted and/or welded together, with steel platform having a hinged aluminum grating section for access through floor for emergency use, plate closed back, safety hand bar on back, side guard rails, open top, and open front. Guide rails shall be steel T section elevator type, with 3 precision machined surfaces for guide wheel contracts, machined tongue and groove joints, bolted splice plates, welded-on ladder rungs on 12" centers from top to bottom, and anchors to structure on 5 foot maximum centers. Car shall have 8 needle bearing guide wheels and 4 spring loaded needle bearing side thrust guide wheels running on guide rails.

4. Drive Unit: This shall be a double output shaft right angle worm gear reducer type with direct connected standard NEMA motor, electrically released mechanically operated brake to stop lift upon power or control failure and to prevent coasting. All bearings shall be anti-friction type, and all gears and bearings.
5. Chains (2 required): These shall be roller type, each suitable for supporting entire weight of car assembly plus lift rated load with safety factor of 8, independently spring loaded at one end to prevent slack and automatically equalize the lifting load, and driven by sprockets on drive unit.
6. Controls: Power shall be supplied to car assembly by a heavy duty flexible cable with automatic rewind cord reel. Cord shall enter car assembly through strain relief bushings. Main control panel shall be NEMA 1 wall mounted type, with separate motor controllers for each travel direction, and overload protective devices to prevent lift operation in excess of 150% of its rated capacity. Control system shall operate on 120 volts maximum, and shall include: two sets of momentary contact UP and DOWN push buttons in car, requiring both of operator's hands to activate lift; a red mushroom head EMERGENCY STOP reset button in car; momentary contact UP and DOWN push button station at top, and bottom landings; upper and lower normal limit switches, each to stop movement of lift at each end of its normal travel and allow movement in opposite direction; and upper and lower final limit switches to stop lift if the appropriate normal limit switch fails to stop lift.
7. Safety Pressure Screen: This shall cover entire bottom area of car, and shall be arranged to operate a normally closed safety switch if screen is obstructed in its downward movement by a force of 4 pounds or more. Momentary operation of safety switch shall de-energize motor control circuits for both up and down travel. Control system shall remain de-energized until manually reset by operation of reset button in car.
8. Car Safety: Each chain shall have an independent mechanically operated instantaneous wedge type car safety device, which shall engage and immediately stop car upon slackening or breaking of chain, and simultaneously operate a switch to de-energize the drive motor.

E. Piping: Station piping shall be ductile iron. Where the piping passes through the chamber walls, a minimum of 1/4 inch thick steel sleeves shall be provided. The sleeves shall be filled with non-shrink grout to form a water-tight seal. All sizes of piping and valves shall be as indicated on the drawings.

1. Pump suction and pump discharge lines shall be provided with plug valves as indicated. These plug valves shall be Desurik Figure 118, or equal, plug valves with cast iron body, welded-in nickel seat and resilient faced plug.

    a. Plug valves inside pump station shall be lever actuated.

    b. The plug valves outside the pump station shall be 2" square nut actuated, complete with extension stems as required, and with the top of nut located no more than 6 inches below finished grade.

2. The pump discharge lines shall be provided with check valves. The check valves shall be 250 pound swing type, flanged iron body bronze mounted, non-slam type, with outside levers and springs as manufactured by Crane, Stockham, Powell, or equal.
3. The stainless steel air bubbler line within the pump station and entrance tube shall be provided by the manufacturer with a fitting suitable for extension to the wet well as shown on the drawings. All piping inside wet well shall be stainless steel.

F. Ventilation: The pump station shall be provided with a ventilation system and air ducts to the atmosphere capable of changing the air in the station 30 times per hour and adequately screened and protected to exclude rain, vermin, and other foreign material.

G. Dehumidifier: A package dehumidifier shall be provided to insure a dry atmosphere for the protection of electrical controls and prevention of condensation. The dehumidifier shall be capable of removing 20 pints of water per day based on 60% relative humidity at 80 degrees F. The unit shall be capable of handling 180 CFM.

H. Sump Pump: One submersible sump pump shall be provided for the removal of water from the pump chamber. The pump shall have a minimum capacity of 1,000 GPH at 21 feet TDH. The sump pump shall be controlled by a built-in float switch, capable of operation on a maximum of 6 inch water differential. The pump shall be equipped with a vertical close coupled motor. Water shall be excluded from the motor housing by a mechanical seal. The pump discharge piping shall be a minimum of 1-1/4 inches in diameter. The discharge line shall contain a check valve and gate valve within the sump chamber.

I. Corrosion Protection: After welding, all interior and exterior surfaces shall be cleaned of dirt, grease, oil, rust, mill scale and welding splatter and shall be grit blasted to a commercial finish. After grit blasting, all inside and outside surfaces on the pump chamber and entrance tube shall be coated with one coat of polyamide catalyzed epoxy resin primer 40-DR-5 as manufactured by Mobile Paint Mfg., Co., Inc. The primer coat shall be applied to a minimum dry film thickness of 4 mils. After thorough inspection of the primer coat, the exterior surface shall be coated

with two coats of polyamide catalyzed epoxy resin finish 40-AH-40 as manufactured by Mobile Paint Mfg. Co., Inc. The finish coats shall be applied to a minimum dry film thickness of 4 mil. each. The total coating dry film thickness for painted surfaces shall be a minimum of 12 mils.

1. A touch-up kit shall be provided for repair of any mars or scratches occurring during installation. This kit shall contain detailed instructions for use and shall be the same material as the original coating.
2. A heavy synthetic rubber mat shall be cemented to the station floor to protect the coating on the steel floor.
3. The station shall be protected from electrolytic corrosion by two 17 lb. sacrificial magnesium anodes. The anodes shall be secured to the station structure by insulated heavy copper leads. The leads shall be attached to the station in a manner to insure an adequate circuit is completed.

J. Heater: An electrical heater shall be provided with fan-forced heat, automatic dial-type thermostat, safety over heat limiter, copper anodized aluminum reflector, safety grill, carrying handle and safety tip-over switch. It shall be a minimum of 1300/1500 watts, 4400/5122 BTU with a UL approved electrical cord and 3-prong plug.

K. Spare Parts: A complete replacement pump shaft seal shall be furnished within the lift station. The spare seal container shall include complete installation instructions. Spare volute gaskets for the sewage pumps shall also be furnished.

2.03 SEWAGE PUMPS

A. General: Sewage pumps shall be Allis Chalmers, Smith and Loveless, or equal, vertical close-coupled non-clog centrifugal dry basin pumps. Drives shall be constant speed.

B. Pumps: Each pump shall be completed with: iron casing and iron suction elbow having adequate access to the volute and impeller; cast iron pedestal base; cast iron impeller; double mechanical seal, high strength carbon steel pump shaft, supported by grease lubricated ball thrust and radial bearings, mounted in a housing or frame of cast iron. Seals shall be grease lubricated hardened stainless steel shaft protective sleeve; replaceable brass or stainless steel casing wearing ring or suction cover wear plate.

C. Motors: These shall be NEMA standard vertical ball bearing solid shaft motor, with drip-proof enclosure, 1.15 service factor, Class B insulation for operation in 40 degrees C. ambient with not over 60 degrees C. Bearings shall be oil or grease lubricated, with AFBMA rating of at least 5 year B-10 life. Each motor shall be fitted with lifting, eyes, each capable of supporting the entire weight of the pump and motor.

D. Pump Test: The pump manufacturer shall perform the following inspections and tests on each pump before shipment from factory:

1. Impeller, motor rating and electrical connections shall first be checked for compliance to the customer's purchase order.
2. A motor and cable insulation test for moisture content or insulation defects shall be made.
3. Pumps shall be run dry to establish correct rotation and mechanical integrity.
4. Certified heads and gallons per minute pumped.
5. A written report stating the foregoing shall be shipped with each pump.

E. Pump Warranty: The pump manufacturer shall warrant the units being shipped to the owner against defects in workmanship and material used for a period of 5 years or 10,000 hours.

F. Wet Well Warranty: Shall be warranted for 1 year against defects in workmanship and materials.

G. Dry Pit Station: Shall be warranted for 1 year against defects in workmanship and materials.

2.04 ULTRASONIC FLOW METER

A. General: Ultrasonic flow meter shall be Polysonics Model UFM, or equal meter, complete with transducer, transmitter, and indicator. Accuracy shall be + 5 % for a velocity range of 0-20 fps. Metering equipment shall operate on 120 volt 60 Hz power supply.

B. Meter Body and Signal Converter: Shall have 4-20 ma DC signal.

C. Recorder: This shall be a Dynamaster 4330 series as manufactured by Bristol-Babcock or equal, surface mounted large case circular 7 day chart indicating, recording, and integrating instrument reading in US gpm, with electric chart drive.

1. Furnish 400 charts and ink supply, deliver these to the Owner's representative, and obtain his signed receipt therefore.

2.05 ELECTRICAL CONTROLS

A. General: The control panel shall be mounted within a NEMA Type 4 enclosure, fabricated of galvanized steel and reinforced as required. All switches shall be labeled and a coded wiring diagram shall be provided. The pumping station shall be factory wired to a single electrical supply point; ready for field installation and field electrical supply connection.

B. All circuit breakers, motor-starter reset buttons, and pump control switches shall be

mounted so that they are separated from high voltage wiring and controls.

C. A grounding type convenience duplex outlet shall be provided on the side of the cabinet for the operation of 115 volt AC devices.

D. Thermal magnetic air circuit breakers shall be provided for branch disconnect service and over-current protection of all motor, control and auxiliary circuits. Magnetic across-the-line starters with under-voltage release and overload coils for each phase shall be provided for each pump motor to give positive protection. Each single phase auxiliary motor shall be equipped with an over-current protection device, in addition to its branch circuit breaker, or shall be impedance protected.

E. Pump Controller: Pump Controller shall be a purged air pump-down liquid level type, with the devices to operate the pumps. Controller shall consist of field adjustable pressure switches, two separate air compressors, one air storage tank, air pressure regulating and control devices, and other necessary items required for the complete operational unit, factory assembled, factory piped to a single air outlet point, ready for field connections, and factory wired. Control assembly shall operate on 120 volt 60 Hz power supply.

1. Liquid Level Control: Pressure switches shall have independent high and low adjustments for each pump capable of a minimum differential of 18 inches of water. Controls shall be adjusted to start and stop pumps at indicated wet well liquid level elevations.
2. Operation: When wet well liquid level rises to first pump starting elevation, one pump shall start. When wet well liquid rises to second pump starting elevation, the second pump shall start and run simultaneously with the first pump. When wet well liquid level falls to pump cut-off elevation, all pumps which are running shall stop. Starting sequence of the 2 pumps shall be alternated after each pumping cycle. Air compressors shall operate one at a time, and shall have manual switch for compressor selection.
3. Alternator: An automatic pump alternator with manual "On-Off" switch shall be provided to change the sequence of operation of the pumps the completion of each pumping cycle.
4. Relays and timers shall be provided to prevent simultaneous starting of both pump motors.
5. Adjustable relays with timer shall be provided and interlocked with the motor starters to prevent immediate restart on energize reconnect of power to circuits.
6. Any and all relays and or contracts shall be provided by the pump control panel supplier and coordinated with Section 26 05 00. It shall be the responsibility of the manufactures to coordinate all work required under Section 27 00 00 for the following:

    a. High water alarm

b. Low water alarm

c. Pump run time

d. Gallons per minute of waste pumped

e. Pump failure alarm

f. Momentary push button station key lock entry switch and intrusion alarm switch

F. Lighting: Adequate lighting shall be provided for the convenience and safety of the Owner's personnel. The lighting shall provide illumination for all areas in the station. Lights shall come on automatically when the entrance lid is raised. A manual switch shall maintain the lighting circuit when the lid is closed in inclement weather.

G. Telemetry: shall be as specified in Section 27 00 00 hereinafter.

H. Automatic dialer shall be equal to Kaye Instruments, Inc., Dialog Plus, with power loss protection, internal and external telephone and power line surge protection. See Section 27 00 00.

I. Section 33 32 10: Air Scrubber

PART 3 EXECUTION

3.01 MEASUREMENT AND PAYMENT - PUMP STATION

A. Pump Station shall be measured by the number installed and accepted.

B. If provided for on the Bid Form, Pump Station as specified, installed and operating shall be paid for at the unit price per each installed and accepted.

C. If not provided for on the Bid Form, payment for Pump Station shall not be made directly, but shall be included in the payment for the items with which it is associated.

D. Excavation, foundation, backfill, connections, electrical service, dialers, fittings, disposal of spoil, testing, start-up, replacement of defective parts, fencing, site grading, seeding and mulching, or other specified equipment shall not be paid for directly.

END OF SECTION

SECTION 33 32 10

WET WELL MOUNTED DUPLEX PUMP STATION

PART 1 GENERAL

1.01 WORK INCLUDED

A. All electrical work required to meet and/or exceed the National Electrical code and electrical requirements of Kingsport Power Company.

B. Cost of all electrical permits for the above electrical work.

C. All plumbing work required to meet and/or exceed the Southern Standard Building Code.

D. Cost of permits for the above work.

E. On a 5'-0" diameter concrete (pre-cast) wet well, furnish and install a complete wet well mounted sewage lift pump station system equal to units manufactured by Smith Loveless Inc. Kansas. System shall include a complete and operating factory build assembly with fiberglass housing, controls, duplex sewage pumps, discharge piping, automatic dialer, suction piping, steel cover plates, manway access panels, electric heaters, ventilating blowers, vacuum priming system, factor tests, spare parts installation and operation instructions and any and all equipment for a complete operating systems as detailed on plans.

F. Electrical and plumbing subcontractors shall be licensed by the State of Tennessee.

G. Connection for an air scrubber.

H. Communication system automatic dialer.

1.02 RELATED WORK

A. Testing, adjusting, and final operation

B. Specified elsewhere:

1. Section 03 30 00: Concrete
2. Section 26 05 00: Electrical
3. Section 27 00 00: Communication
4. Section 33 32 30: Air Scrubber

PART 2 PRODUCTS

2.01 OPERATING CONDITIONS

A. Each pump shall have a capacity as shown on construction plans.

2.02 SEWAGE PUMPS

A. The pumps shall be vertical, non-clog sewage pumps of heavy cast iron construction, especially designed for the use of mechanical seals and vacuum priming. In order to minimize seal wear caused by lineal movement of the shaft, the shaft bearing nearest the pump impeller shall be locked in place so that end play is limited to the clearance within the bearing. To minimize seal wear resulting from shaft deflection caused by the radial thrust of the pump, the shaft from the top of the impeller to the lower bearing supporting the impeller shall have a minimum diameter of 1 7/8" for motor frame sizes 213 through 286; 2 1/8" for motor frame sizes 324, and 326; and 3" for frame 364 and larger. The dimension from the lowest bearing to the top of the impeller shall not exceed 6".

B. The bearing nearest the impeller shall be designed for the combined thrust and radial load. The upper bearing shall be free to move linearly with the thermal expansion of the shaft and shall carry only radial loads.

C. The shaft shall be solid stainless steel through the pump and bottom bearing to eliminate corrosion with the pump or the mechanical seal. Removable shaft sleeves shall not be acceptable if the shaft under the sleeve does meet the specified minimum diameter.

D. The pump impellers shall be of the enclosed type made of close-grain cast iron and shall be balanced. The impeller shall be keyed with a stainless steel key and secured to the motor shaft by a stainless steel cap screw equipped with a Mylock or other suitable self-locking device. The impeller shall not be screwed or pinned to the motor pump shaft and shall be readily removable without the use of special tools. To prevent the buildup of stringy materials, grit and other foreign particles around the pump shaft, impellers less than full diameter shall be trimmed inside the impeller shroud. The shroud shall remain full diameter so that close minimum clearance from shroud to volute is maintained. Both the end of the shaft and the bore of the impeller shall be tapered to permit easy removal of the impeller from the shaft.

E. The pump shall be so constructed so as to permit priming from the low pressure area behind the impeller. Priming from high pressure connections tending to cause solids to enter and clog the priming system, shall not be acceptable. The priming bowl shall be transparent to enable the operator to monitor the priming level.

F. The pump shall be arranged so that the rotating element can easily be removed from

the volute without disconnecting the electrical wiring or disassembling the motor, impeller, backhead or seal, so that any foreign object may be removed from the pump or suction line.

G. The pump shaft shall be sealed against leakage by a single mechanical seal constructed so as to be automatically drained and primed each time the pump is drained and primed. Water which lubricates the mechanical seal shall be automatically drained from around the seal, thereby preventing freezing and breakage of the seal during power outages in sub-freezing temperatures.

H. The seal shall be of carbon and ceramic materials with the mating surfaces lapped to a flatness tolerance of one light band. The rotating ceramic shall be held in mating position with the stationary carbon by a stainless steel spring. The pump volute shall be furnished with mounting lugs and be bolted to the station floor plate, forming a gas- tight seal.

2.03 MOTORS

A. The pump motors shall be vertical, solid shaft, NEMA P-base squirrel-cage induction type, suitable for 3 phase, 60 cycle, 480 volt electric current. They shall have Class F insulation, suitable for temperatures up to 105 degrees Centigrade. The motors shall have normal starting torque and low-starting current, as specified by NEMA Design B characteristics. They shall be open drip-proof design with forced air circulation by integral fan. Openings for ventilation shall be uniformly spaced around the motor frame. Leads shall be terminated in a cast connection box and shall be clearly identified.

B. The motors shall have 1.15 service factor. The service factor shall be reserved for the owner's protection. The motors shall not be overloaded beyond their nameplate rating, at the design condition, nor at any head in the operating range as specified under Operating Conditions.

C. The motor shaft shall equal or exceed the diameter specified under sewage pumps, at all points from immediately below the top bearing to the top of the impeller hub.

D. The bearing cap shall be provided to hold the bottom motor bearing in a fixed position. Bearing housings shall be provided with fittings for lubrication as well as purging old lubricant. The motor shall be fitted with heavy lifting eyes, each capable of supporting the entire weight of the pump and motor.

2.04 CONTROLS

A. The control equipment shall be mounted in a NEMA Type I steel enclosure, with a removable access cover. The circuit breakers, starter reset buttons, and control switches shall be operable without removing the access cover for deadfront operation.

B. A grounding type convenience outlet shall be provided on the side of the cabinet for operation of 115 volt AC devices. Thermal magnetic air circuit breakers shall be provided for branch disconnect service and short circuit protection of all motor control and auxiliary circuits.

C. Magnetic across-the-line starters with under-voltage release and overload coils for each phase shall be provided for each pump motor to give positive protection. Each single phase auxiliary motor shall be equipped with an over-current protection device in addition to the branch circuit breaker, or shall be impedance protected. All switches shall be labeled and a coded wiring diagram shall be provided.

D. To control the operation of the pumps with variations of sewage level in the wet well, a minimum of 5 mercury displacement switches shall be provided. A minimum of 30' of cord shall be provided with each switch to eliminate the hazards created by splicing. The cord shall have a corrosion resistant vinyl jacket and be multi-stranded in order to prevent fatigue. A factory furnished step down transformer shall be included as a part of controls to operate 115 volt devices.

2.05 ALARMS

A. Red flashing alarm light and audible alarm bell shall be supplied in a separate lockable NEMA IV enclosure and/or lockable enclosures as required for mounting (1) at the control box or (2) remove from box or (3) alarm light mounted on the panel enclosure. Units shall be complete with Nicad rechargeable batteries, charger and all accessories required for a complete operating alarm system. The following alarm circuits shall be furnished:

1. High water alarm
2. Power failure alarm
3. Pump failure alarm
4. Low water alarm

B. Operation of system: on sump level rise lower mercury switch shall first be energized, then upper level switch shall next energize and start pump. With pump operating, sump level shall lower to low switch turn-off setting and pump shall stop. A timed control relay shall index so that lag pump will start on next operation. If sump level continues to rise when lead pump is operating, override switch shall energize and start lag pump. Both lead and lag pump shall operate together until low level switch turns off both pumps. If level continues to rise while both pumps

are operating, alarm switch shall energize and signal the alarm, where used. If one pump should fail for any reason, the second pump shall operate on the override control and if level rises above override control, alarm shall signal, where used. All level switches shall be adjusted for level setting from the surface.

C. Alarm contacts shall be interlocked with the automatic dialer.

2.06 VACUUM PRIMING SYSTEM

A. A separate and independent priming system shall be furnished for each sewage pump, providing complete standby operation. Each priming system shall include a separate vacuum pump. Vacuum pumps shall have corrosion resistant internal components. They shall each be capable of priming the sewage pump and suction piping in not greater than 60 seconds, under rated static suction lift conditions of 20' at mean sea level.

B. Each priming system shall be complete with vacuum pump, vacuum control solenoid valve, prime level sensing probe, and a float operated check valve installed in the system ahead of the vacuum pump to prevent liquid from entering the vacuum pump. The float-operated check valve shall have a transparent body for visual inspection of the liquid level and shall be automatically drained when the vacuum pump shuts off.

C. The priming system shall automatically provide positive lubrication of the mechanical seal each time the sewage pump is primed. To prevent excessive stoppage from grease accumulation, no passageway in the priming system through which sewage must pass shall be smaller than the equivalent of a 2 1/2" opening.

2.07 ENVIRONMENTAL EQUIPMENT

A. A ventilating blower shall be provided, capable of delivering 250 cfm at 0.1" static water pressure, in order to remove the heat generated by continuous motor operation. The ventilating blower shall be turned on and off automatically by a pre-set thermostat. The ventilating blower shall be rigidly mounted from the station floor. The discharge outlet shall have a thick resilient gasket which matches with a louvered opening in the fiberglass cover to seal the discharge to the cover when the cover is closed. An electric heater controlled by a pre-set thermostat shall be furnished. The heater shall be rigidly mounted in the station to prevent removal.

PART 3 EXECUTION

3.01 CONSTRUCTION

A. The station shall be constructed in one complete factory-built assembly. It shall be sized to rest on the top of the wet well as detailed in the construction drawings. The supporting floor plate shall be minimum 3/8" thick steel with broken down edges or

other reinforcing, as required, to prevent deflection and insure an absolutely rigid support.

B. The pump station shall be enclosed by a hinged fiberglass cover. The cover shall have a suitable drip-lip around the edge and shall be provided with a hasp and staple connection to the floor plate to allow the pump chamber to be locked with a padlock.

C. The cover shall have a latch mechanism to keep the cover open under load. Adjustable ventilating louvers shall be provided on each end of the fiber-glass cover which are capable of being closed during cold weather operation.

D. The steel manway cover located exterior to the fiberglass pump chamber shall be provided, complete with padlocking provisions. The manway shall be an integral part of the station floor plate to provide access into the wet well.

E. The pump motors shall be vertical, solid shaft, NEMA p-base, squirrel-cage induction type, suitable for 3 phase, 60 cycle, 480 volt electric current. They shall have Class F insulation, suitable for temperatures up to 105 degrees Centigrade.

F. Insulation temperature shall, however, be maintained below 80 degrees Centigrade. The motors shall have normal starting torque and low-starting current, as specified by NEMA Design B characteristics. They shall be open drip-proof design with forced air circulation by integral fan. Openings for ventilation shall be uniformly spaced around the motor frame. Leads shall be terminated in a cast connection box and shall be clearly identified.

G. A stanchion with lifting arm shall be provided to lift each pump. The lifting arm shall have a hook over the center of the motor to support a hoist (provided by others) to facilitate easy removal of the motors, impellers and pumps from the station.

H. The pump volutes and discharge piping shall be mounted in relation to the floor plate as detailed in the construction drawings.

3.02 WELDING

A. All steel structural members shall be joined by electric arc welding with welds of adequate section for the point involved.

3.03 PROTECTION AGAINST CORROSION

A. After welding, all inside and outside surfaces of the structure shall be blasted with steel grit to remove rust, mill scale, weld slag, etc. All weld spatter and surface roughness shall be moved by grinding. Immediately following the cleaning, a single heavy inert coating shall be factory-applied to all inside and outside surfaces prior to shipment. This coating shall be "Versapox" epoxy resin especially formulated by Smith & Loveless for abrasion and corrosion resistance. The dry coating shall

contain a minimum of 85% epoxy resin with the balance being pigments and thixotropic agents.

3.04 SEWAGE PIPING

A. The pump suction shall be drilled and tapped for a 125 pound American Standard Flange for ready connection of the suction riser. The discharge line from each pump shall be fitted with a clapper-type check valve and eccentric plug valve. Size, location, and quantity of check valves and plug valves shall be as shown on the construction drawing. The check valve shall be of the spring-loaded type with external lever arm and an easily replaced resilient seat for added assurance against vacuum leaks. Check valves shall have a stainless steel shaft with replaceable bronze shaft bushings and shall be sealed through the bearings with O-rings. An operating wrench shall be provided for the plug valves.

B. Protrusions through the floor plate shall be gas-tight where necessary to effect sealing between the equipment chamber and wet well. Bolted and sealed joints shall be provided at the volutes or suction pipes in order to prevent corrosive, noxious fumes from entering the station. The lift station manufacturer shall extend the suction and discharge connections below the floor plate at the factory, so that field connections can be made without disturbing the gas-tight seals.

3.05 FACTORY TESTS

A. All components of the pump station shall be given an operational test of all equipment at the factory to check for excessive vibration, for leaks in all piping or seals, for correct operation of the vacuum priming and control systems and all auxiliary equipment. Pumps shall take suction from a deep well, simulating actual service conditions.

3.06 SPARE PARTS

A. A complete replacement pump shaft seal assembly shall be furnished with each lift station. The spare seal shall be packed in a suitable container and shall include complete installation instructions. A spare volute and seal gasket shall be provided.

3.07 INSTALLATION AND OPERATING INSTRUCTIONS

A. Installation of the pump chamber shall be done in accordance with the written instructions provided by the manufacturer.

B. Operation and maintenance manuals shall be furnished which include parts lists of components and complete service procedures and troubleshooting guide.

3.08 GUARANTEE

A. The Manufacturer of the lift station shall have a minimum of five years' experience in the design and manufacture of vacuum-priming type factory-built automatic pump stations and shall guarantee the structure and all equipment to be free from defects in materials and workmanship for a period of up to one year from date of start-up, not to exceed 18 months from the date of shipment.

B. Warranties and guarantees by the suppliers of various components in lieu of a single-source responsibility by the Manufacturer shall not be accepted. The Manufacturer shall be solely responsible for the guarantee of the station and all components.

C. In the event a component fails to perform as specified or is proven defective in service during the guarantee period, the Manufacturer shall provide a replacement part without cost to the owner. He shall further provide, without cost, such labor as may be required to replace, repair or modify major components such as pumps, pump motors and sewage piping manifold.

D. It is not intended that the Manufacturer assume responsibility for contingent liabilities or consequential damages of any nature resulting from defects in design, material, workmanship or delays in delivery, replacement or otherwise.

3.09 MEASUREMENT AND PAYMENT - PUMP STATION

A. Pump Station shall be measured by the number installed and accepted.

B. If provided for on the Bid Form, Pump Station, as specified, installed, and operating, shall be paid for at the unit price per each installed and accepted.

C. If not provided for on the Bid Form, payment for Pump Station shall not be made directly, but shall be included in the payment for the items with which it is associated.

D. Excavation, foundation, backfill, connections, electrical service, dialers, fittings, disposal of spoil, testing start up, replacement of defective parts, fencing, site grading, seeding and mulching, or other specified equipment shall not be paid for directly.

END OF SECTION

SECTION 33 32 20

SIMPLEX RESIDENTIAL PUMP STATION

PART 1 GENERAL

1.01 WORK INCLUDED

The complete operating installation shall include the following:

A. All electrical work required inside and/or outside the residence required to meet and/or exceed the electrical code City of Kingsport.

B. Cost of electrical permits for the above electrical work.

C. All plumbing work required outside the residence to meet and/or exceed the plumbing code of the City of Kingsport.

1. Plumbing work required within the building and/or residence to meet the plumbing code of City of Kingsport shall be the responsibility of owner(s) of the residence or building.

D. Cost of plumbing permits for the above plumbing work.

E. Furnishing and installing a complete operating pumping station system equal to units by HYDR-O-MATIC Pumps, Ashland, Ohio, with a fiberglass tank, steel top, stainless steel discharge piping and all accessories. System shall include one sewage grinder pump, three 3900 mercury switch level controls, discharge plumbing with hydraulically sealed discharge flange, pump mounting plate with bottom rail supports, upper rail supports, lifting chain, pedestal mount and cord sealing plate for panel or NEMA IV junction box; to be installed in factory fabricated basin with cover. A NEMA IVR dead front control box shall be supplied for mounting at the sump site or remote from the basin as required. Structure and dimensions to be as shown on approved shop drawing.

F. Electrical and plumbing subcontractors shall be licensed by the City of Kingsport.

1.02 RELATED WORK

A. Testing adjusting and final operation.

B. Specified elsewhere:

1. Section 03 30 00: Concrete
2. Section 26 05 00: Electrical

PART 2 PRODUCTS

2.01 OPERATING CONDITIONS

A. See Pump Schedule on Plan Drawings for Pump Capacity and Voltage.

2.02 SUMP LEVEL CONTROLS

A. Sealed float type mercury switches shall be supplied to control sump level and alarm signal. The mercury tube switches shall be sealed in a solid polyurethane float for corrosion and shock resistance. The support wire shall have a heavy Neoprene jacket. A weight shall be attached to cord above the float to effectively prevent sharp bends in the cord when the float operates. The float switches shall hang in a stainless steel sump supported only by the cord which is held to the support bracket. Two float switches shall be used to control level. One for pump turn-on, one for pump turn-off. A third switch shall be provided if with alarm. Float switches shall be Model No. 3900.

2.03 ALARMS

A. Alarm light shall be supplied for mounting on the control box or remove from box or alarm light mounted on panel enclosure.

2.04 ELECTRICAL CONTROL PANEL

B. Control panel shall have a NEMA IVC dead front enclosure. A circuit breaker shall be provided for the pump and a magnetic started with 3 leg overload protection for three phase operation, or 1 leg overload protection for single phase operation shall be provided for the pump. H-O-A switch and run light shall be supplied for the pump. Terminal strip shall be provided for connecting pump and control wires. Additional terminals shall be provided to connect alarm. A transformer shall be supplied to give 24 volt control circuit.

2.05 STAINLESS STEEL CHECK VALVE AND PIPING

A. The discharge piping shall include a HYDR-O-MATIC ball check valve with hydraulically sealed stainless steel discharge flange and gate valve with stainless steel extension and handle. Discharge piping inside the pump station shall be stainless steel and fitted with NPT coupling. Discharge piping inside the pump station and all accessories inside the pump station shall be stainless steel. All piping external to the station shall be furnished and installed by the contractor.

2.06 SUMP BASIN (FIBERGLASS WITH STEEL COVER)

A. The factory fabricated basin, where furnished, shall have an inside diameter of 2 feet and 0 inches, and a height as required by existing grades at the site. The basin cover shall be 28 inches O.D. and 1/4 inch thick for steel. All steel shall be sandblasted inside and outside to remove scale, slag, rust, etc., before painting. Steel shall be coated inside and outside with epoxy paint for corrosion resistance.

2.07 PUMP AND MOTOR

A. The grinder pump and motor are to be specially designed and manufactured so they can operate completely submerged in the liquid being pumped. Electrical power cord is to be sealed by use of a cord grip, with individual conductors additionally sealed into the cord cap assembly with epoxy sealing compound, thus eliminating liquid entering the motor by following individual conductors inside the insulation. The cord grip shall have a male taper pipe thread threaded into a female taper pipe thread in a cord cap. The cord cap shall be sealed into the motor housing with a Buna-N-O-ring, providing an electrical connection which is completely water-tight, yet may be easily removed for service simply by taking out two cap screws.

B. The combination centrifugal pump impeller and grinder unit shall be attached to a common motor and pump shaft made of stainless steel. The grinder unit shall be on the suction side of the pump impeller, discharging directly into the impeller inlet leaving no exposed shaft to permit packing of ground solids. The grinder shall consist of two stages. The cutting action of the second stage shall be perpendicular to the plane of the first cut for better control of particle size. Both stationary and rotation cutters shall be made of hardened and ground stainless steel. The upper (axial) cutter and stationary cutter ring shall be reversible to provide new cutting edges for longer service life. Pump and motor housings are to be high quality grey iron castings. Impeller shall be bronze. All fasteners shall be of 18-8 stainless steel. The pump-motor shaft shall be sealed by two mechanical carbon and ceramic faced seals within an oil filled chamber to provide clean, constant lubrication. The shaft shall be supported by an upper ball radial and thrust bearing and a lower bronze radial sleeve bearing, between the shaft seals to minimize overhang, both running in oil.

C. The motor winding and rotor are to be mounted in a sealed, submersible type housing which is filled with clean high dielectric oil for bearing lubrication and to transmit heat from motor winding to outer housing. Motor winding shall be securely held in the housing with machine screws so that it may be removed in the field without the use of heat or a press. The ball bearing is to be supported by an O-ring sealed, movable cap so that grinder and impeller clearance may be adjusted externally for the most efficient operation.

PART 3 EXECUTION

3.01 OPERATION OF SYSTEM

A. On sump level rise lower mercury switch shall first be energized, then upper level switch shall next energize and start pump. With pump operating, sump level shall lower to low switch turn-off setting and pump shall stop. If level continues to rise when pump is operating, alarm switch shall energize and signal the alarm, where used. All level switches shall be adjusted for level setting from the surface.

3.02 MEASUREMENT AND PAYMENT - PUMP STATION

A. Pump Station shall be measured by the number installed and accepted.

B. If provided for on the Bid Form, Pump Station as specified, installed and operating shall be paid for at the unit price for each installed and accepted.

C. If not provided for on the Bid Form, payment for Pump Station shall not be made directly, but shall be included in the payment for the items with which it is associated.

D. Excavating, foundation, backfill, connections, electrical service, dialers, fittings, disposal of spoil, testing, start-up, replacement of defective parts, fending, site grading, seeding and mulching, or other specified equipment shall not be paid for directly.

END OF SECTION

SECTION 33 32 22

DUPLEX RESIDENTIAL PUMP STATION

PART 1 GENERAL

1.01 WORK INCLUDED

The complete operating installation shall include the following:

A. All electrical work required inside and/or outside the residence required to meet and/or exceed the electrical code of the City of Kingsport.

B. Cost of electrical permits for the above electrical work.

C. All plumbing work required outside the residence to meet and/or exceed the plumbing code of the City of Kingsport.

1. Plumbing work required within the building and/or residence to meet the plumbing code of City of Kingsport shall be the responsibility of owner of the residence or builder.

D. Cost of plumbing permits for the above plumbing work.

E. Furnish and install a complete pumping station system equal to units by HYDR-O-MATIC Pumps, Ashland, Ohio, with a fiberglass thank, steel top, and stainless steel discharge piping and all accessories. System shall include two sewage grinder pump, four 3900 mercury switch level controls, discharge plumbing with hydraulically sealed discharge flange, pump mounting plate with bottom rail supports, upper rail supports, lifting chain, pedestal mount and cord sealing plate for panel or NEMA IV junction box; to be installed in factor fabricated basin with cover or on-site concrete basin. A NEMA IVR dead front control box shall be supplied for mounting at the sump site or remote from the basin as required. Structure and dimensions to be as shown on drawing.

F. Electrical and plumbing subcontractors shall be licensed by the City Kingsport.

1.02 RELATED WORK

A. Specified elsewhere:

1. Section 03 30 00: Concrete
2. Section 26 05 00: Electrical

PART 2 PRODUCTS

2.01 OPERATING CONDITIONS

See Pump Schedule on Plan Drawings for Pump Capacity and Voltage.

2.02 SUMP LEVEL CONTROLS

A. Sealed float type mercury switches shall be supplied to control sump level and alarm signal. The mercury tube switches shall be sealed in a solid polyurethane float for corrosion and shock resistance. The support wire shall have a heavy neoprene jacket. A weight shall be attached to cord above the float to effectively prevent sharp bends in the cord when the float operates. The float switches shall hang in a stainless steel sump supported only by the cord which is held to the support bracket. Two float switches shall be used to control level. One for pump turn-on, one for pump turn-off. A third switch shall be provided if with alarm. Float switches shall be Model No. 3900.

2.03 ALARMS

A. Alarm light to be supplied in separate NEMA IV enclosure for mounting at the control box or remove from box or alarm light mounted on panel enclosure.

2.04 ELECTRICAL CONTROL PANEL

A. Control panel shall have a NEMA IVR dead front weatherproof enclosure. A lock hasp shall be provided on door. A circuit breaker shall be provided for each pump and a magnetic charter with 3 leg overload protection for three phase operation, or 1 leg overload protection for single phase operation, shall be provided for each pump. An alternating relay shall be provided to alternate pumps on each successive cycle of operation. Starters shall have auxiliary contact to operate both pumps on override condition. An interlock relay shall be provided to automatically re-connect the control circuit in case of circuit breaker trip on one pump. H-O-A switches and run lights shall be supplied for each pump. Terminal strip shall be provided for connecting pump and control wires. Additional terminals shall be provided to connect alarm. A transformer shall be supplied to give 24 volt control circuit. All electrical controls within the control panel shall be labeled with a permanent label for the pump operating - Pump #1 or Pump #2. For example, Alternator - Pump #1, Alternator - Pump #2, or Starter Pump #1, etc.

2.05 CHECK VALVE AND STAINLESS STEEL PIPING

A. The discharge piping shall include a HYDR-O-MATIC ball check valve with hydraulically sealed stainless steel discharge flange and gate valve with stainless steel extension handles and supports for each pump. Discharge piping inside the pump station shall be stainless steel and shall be fitted with two NPT couplings. All

piping external to the station shall be furnished and installed by the contractor.

2.06 SUMP BASIN (FIBERGLASS WITH STEEL COVER)

A. The factory fabricated basin, where furnished, shall have an inside diameter of 3 feet and 0 inches, and a height as required by existing grades at the site. The basin cover shall be 40 inches O.D. and 1/4 inch thick. Cover shall be sandblasted inside and outside to remove scale, slag, rust, etc., before painting. Basin shall be furnished with a 8" diameter inlet hub and a 4" diameter hub for a draft connection to an air scrubber. Steel shall be coated inside and outside with tar base epoxy paint for corrosion resistance. Steel cover plate shall be permanently marked with the following 1/2-inch high letters - "PUMP #1 and PUMP #2" for maintenance. The installing contractor shall verify that the proper electrical controls operates the designated pump.

2.07 PUMP AND MOTOR

A. The grinder pump and motor are to be specially designed and manufactured so they can operate completely submerged in the liquid being pumped. Electrical power cord is to be sealed by use of a cord grip, with individual conductors additionally sealed into the cord cap assembly with epoxy sealing compound, thus eliminating liquid entering the motor by following individual conductors inside the insulation. The cord grip shall have a male taper pipe thread threaded into a female taper pipe thread in a cord cap. The cord cap shall be sealed into the motor housing with a Buna-N-O-ring, providing an electrical connection which is completely water-tight, yet may be easily removed for service simply by taking out two cap screws.

B. The combination centrifugal pump impeller and grinder unit shall be attached to a common motor and pump shaft made of stainless steel. The grinder unit shall be on the suction side of the pump impeller, discharging directly into the impeller inlet leaving no exposed shaft to permit packing of ground solids. The grinder shall consist of two stages. The cutting action of the second stage shall be perpendicular to the plane of the first cut for better control of particle size. Both stationary and rotation cutters shall be made of hardened and ground stainless steel. The upper (axial) cutter and stationary cutter ring shall be reversible to provide new cutting edges for longer service life. Pump and motor housings are to be high quality grey iron castings. Impeller shall be bronze. All fasteners shall be of 18-8 stainless steel. The pump-motor shaft shall be sealed by two mechanical carbon and ceramic faced seals within an oil filled chamber to provide clean, constant lubrication. The shaft shall be supported by an upper ball radial and thrust bearing and a lower bronze radial sleeve bearing, between the shaft seals to minimize overhang, both running in oil.

C. The motor winding and rotor are to be mounted in a sealed, submersible type housing which is filled with clean high dielectric oil for bearing lubrication and to transmit heat from motor winding to outer housing. Motor winding shall be securely

held in the housing with machine screws so that it may be removed in the field without the use of heat or a press. The ball bearing is to be supported by an O-ring sealed, movable cap so that grinder and impeller clearance may be adjusted externally for most efficient operation.

D. So as to achieve optimum scouring velocity in pressure sewer systems with a minimum number of pump units contributing, pump shall be capable of equaling the following performance.

PART 3 EXECUTION

3.01 OPERATING OF SYSTEM

A. On sump level rise lower mercury switch shall first be energized, then upper level switch shall next energize and start pump. With pump operating, sump level shall lower to low switch turn-off setting and pump shall stop. Alternating relay shall index on stopping of pump so that lag pump will start on next operation. If sump level continues to rise when lead pump is operating, override switch shall energize and start lag pump. Both lead and lag pump shall operate together until low level switch turns off both pumps. If level continues to rise while the pumps are operating, alarm switch shall energize and signal the alarm, where used. If one pump should fail for any reason, the second pump shall operate on the override control and if level rises above override control, alarm shall signal, where used. All level switches shall be adjusted for level setting from the surface.

3.02 MEASUREMENT AND PAYMENT - PUMP STATION

A. Pump Station shall be measured by the number installed and accepted.

B. If provided for on the Bid Form, Pump Station as specified, installed and operating shall be paid for at the unit price per each installed and accepted.

C. If not provided for on the Bid Form, payment for Pump Station shall not be made directly, but shall be included in the payment for the items with which it is associated.

D. Excavating, foundation, backfill, connections, electrical service, dialers, fittings, disposal of spoil, testing, start up, replacement of defective parts, fencing, site grading, or other specified equipment shall not be paid for directly.

END OF SECTION

SECTION 33 32 24

DUPLEX PUMP STATION

PART 1 GENERAL

1.01 WORK INCLUDED

A. All electrical work required inside and/or outside the residence required to meet and/or exceed the electrical code of the City of Kingsport.

B. Cost of electrical permits for the above electrical work.

C. All plumbing work required outside the residence to meet and/or exceed the plumbing code of the City of Kingsport.

1. Plumbing work required within the building and/or residence to meet the plumbing code of City of Kingsport shall be the responsibility of owner of the residence or builder.

D. Cost of plumbing permits for the above plumbing work.

E. Furnish and install a complete pumping station system equal to units by HYDR-O-MATIC Pumps, Ashland, Ohio, with a fiberglass tank, steel top, stainless steel discharge piping, stainless steel check valve flanges, stainless steel guide rails, stainless steel pump guild plates, stainless steel base plates and bolts, stainless steel valve extensions, stainless steel chains and alarm supports. System shall include automatic dialing alarm monitoring, 24" x 36" hinged lockable pump access door, two sewage grinder pump, four 3900 mercury switch level controls, discharge plumbing with hydraulically sealed discharge flange, pump mounting plate with bottom rail supports, upper rail supports, lifting chain, pedestal mount and cord sealing plate for panel; to be installed in factor fabricated basin with cover or on-site concrete basin. A NEMA IVR dead front control box shall be supplied for mounting at the sump site or remote from the basin as required. Structure and dimensions to be as shown on drawing.

F. Electrical and plumbing subcontractors shall be licensed by the City Kingsport.

G. Automatic dialing alarm shall be equal to Kaye Instruments, Inc., Dialog Plus, with power loss protection, internal and external telephone and power line surge protection.

H. Connections to an Air Scrubber

1.02 RELATED WORK

A. Specified elsewhere:

1. Section 03 30 00: Concrete
2. Section 26 05 00: Electrical
3. Section 27 00 00: Communications
4. Section 33 32 30: Air Scrubber

1.03 OPERATING CONDITIONS

A. Each pump shall have a capacity and an operating voltage as shown on attached Pump List.

PART 2 PRODUCTS

2.01 SUMP LEVEL CONTROLS

A. Sealed float type mercury switches shall be supplied to control sump level and alarm signal. The mercury tube switches shall be sealed in a solid polyurethane float for corrosion and shock resistance. The support wire shall have a heavy neoprene jacket. A weight shall be attached to cord above the float to effectively prevent sharp bends in the cord when the float operates. The float switches shall hang in the sump supported only by the cord which is held to the stainless steel support bracket. Two float switches shall be used to control level. One for pump turn-on, one for pump turn-off. A third switch shall be provided if with alarm. Float switches shall be Model No. 3900.

2.02 ALARMS

A. Red flashing alarm light and audible alarm bell shall be supplied in a separate lockable NEMA IV enclosure and or lockable enclosures as required for mounting at the control box or remove from box or alarm light mounted on panel enclosure. Units shall be complete with battery backup to operate alarm should a power failure occur; unit shall be complete with Nicad rechargeable batteries, charger and any and all accessories required for a complete operating alarm system. The following Alarm Circuits shall be furnished and interfaced with an automatic telephone dialer:

1. High Water Alarm
2. Power Failure Alarm
3. Pump Failure Alarms Pump #1 and Pump #2
4. Low Water Alarm

2.03 ELECTRICAL CONTROL PANEL (Pedestal Type for Remote Mounting)

A. Control panel shall have a NEMA IVR dead front weatherproof enclosure. A lock hasp shall be provided on door. A circuit breaker shall be provided for each pump and a magnetic charter with 3 leg overload protection for three phase operation, or 1 leg overload protection for single phase operation, shall be provided for each pump. An alternating relay shall be provided to alternate pumps on each successive cycle of operation. Starters shall have auxiliary contact to operate both pumps on override condition. An interlock relay shall be provided to automatically re-connect the control circuit in case of circuit breaker trip on one pump. H-O-A switches and run lights shall be supplied for each pump. Terminal strip shall be provided for connecting pump and control wires. Additional terminals shall be provided to connect alarm. A transformer shall be supplied to give 24 volt control circuit. Furnish with the remote pedestal mount control panel a 53 inch, 1/4 inch thick steel round valve box cover with a 24 inch by 36 inch hinged lockable access door with six anchors. All electrical controls within the control panel shall be labeled with a permanent label for the pump operating - Pump #1 or Pump #2. For example, Alternator Pump #1, Alternator Pump #2, or Starter Pump #1, etc.

2.04 CHECK VALVE AND STAINLESS STEEL PIPING

A. The discharge piping shall include a HYDR-O-MATIC ball check valve with a stainless steel hydraulically sealed discharge flange and gate valve with stainless steel extensions and handles for each pump. Discharge from station shall be fitted with two NPT couplings. All piping external to the station shall be furnished and installed by the contractor.

2.05 SUMP BASIN (FIBERGLASS WITH STEEL COVER)

A. The factory fabricated basin, where furnished, shall have an inside diameter of 5 feet and 0 inches, and a height as required by existing grades at the site. Basin shall be furnished with an 8 inch diameter inlet hum and a 6 inch hub for a draft connection to an air scrubber. The basin cover shall be steel with a 24" x 36" hinged, lockable access door. Cover shall be sandblasted inside and outside to remove scale, slag, rust, etc., before painting. Steel shall be coated inside and outside with tar base epoxy paint for corrosion resistance. Steel cover plate shall be permanently marked with the following 1'2 inch high letters: Pump #1 and Pump #2 for maintenance. The installing contractor shall verify that the proper electrical controls operates the designed pump.

2.06 PUMP AND MOTOR

A. The grinder pump and motor are to be specially designed and manufactured so they can operate completely submerged in the liquid being pumped. Electrical power cord is to be sealed by use of a cord grip, with individual conductors additionally sealed into the cord cap assembly with epoxy sealing compound, thus eliminating

liquid entering the motor by following individual conductors inside the insulation. The cord grip shall have a male taper pipe thread threaded into a female taper pipe thread in a cord cap. The cord cap shall be sealed into the motor housing with a Buna-N-O-ring, providing an electrical connection which is completely water-tight, yet may be easily removed for service simply by taking out two cap screws.

B. The combination centrifugal pump impeller and grinder unit shall be attached to a common motor and pump shaft made of stainless steel. The grinder unit shall be on the suction side of the pump impeller, discharging directly into the impeller inlet leaving no exposed shaft to permit packing of ground solids. The grinder shall consist of two stages. The cutting action of the second stage shall be perpendicular to the plane of the first cut for better control of particle size. Both stationary and rotation cutters shall be made of hardened and ground stainless steel. The upper (axial) cutter and stationary cutter ring shall be reversible to provide new cutting edges for longer service life. Pump and motor housings are to be high quality grey iron castings. Impeller shall be bronze. All fasteners shall be of 18-8 stainless steel. The pump-motor shaft shall be sealed by two mechanical carbon and ceramic faced seals within an oil filled chamber to provide clean, constant lubrication. The shaft shall be supported by an upper ball radial and thrust bearing and a lower bronze radial sleeve bearing, between the shaft seals to minimize overhang, both running in oil.

C. The motor winding and rotor are to be mounted in a sealed, submersible type housing which is filled with clean high dielectric oil for bearing lubrication and to transmit heat from motor winding to outer housing. Motor winding shall be securely held in the housing with machine screws so that it may be removed in the field without the use of heat or a press. The ball bearing is to be supported by an O-ring sealed, movable cap so that grinder and impeller clearance may be adjusted externally for most efficient operation.

PART 3 EXECUTION

3.01 OPERATING OF SYSTEM

A. On sump level rise lower mercury switch shall first be energized, then upper level switch shall next energize and start pump. With pump operating, sump level shall lower to low switch turn-off setting and pump shall stop. Alternating relay shall index on stopping of pump so that lag pump will start on next operation. If sump level continues to rise when lead pump is operating, override switch shall energize and start lag pump. Both lead and lag pump shall operate together until low level switch turns off both pumps. If level continues to rise while the pumps are operating, alarm switch shall energize and signal the alarm, where used. If one pump should fail for any reason, the second pump shall operate on the override control and if level rises above override control, alarm shall signal, where used. All level switches shall be adjusted for level setting from the surface.

3.02 MEASUREMENT AND PAYMENT - PUMP STATION

A. Pump Station shall be measured by the number installed and accepted.

B. If provided for on the Bid Form, Pump Station as specified, installed and operating shall be paid for at the unit price per each installed and accepted.

C. If not provided for on the Bid Form, payment for Pump Station shall not be made directly, but shall be included in the payment for the items with which it is associated.

D. Excavating, foundation, backfill, connections, electrical service, dialers, fittings, disposal of spoil, testing, start-up, replacement of defective parts, fencing, site grading, seeding and mulching, or other specified equipment shall not be paid for directly.

END OF SECTION

SECTION 33 32 30

AIR SCRUBBER

PART 1 GENERAL

1.01 WORK INCLUDED

A. Furnish and install a complete operating, natural draft, self-contained Air Scrubber capable of removing a maximum of 300PPM of (H_2S) Hydrogen Sulfide from the draft air current.

B. Furnish and install a 6 inch PVC natural draft pipe from the pump station to the Air Scrubber.

C. Furnish and install a six foot by six foot steel reinforced six inch thick concrete monolithic pad with eighteen inch deep footings.

D. Furnish and install a 3/4 inch water supply with a reduced pressure type back flow preventer.

E. Furnish and install a complete operating electrical system.

1.02 RELATED WORK

A. Specified elsewhere:

1. Section 02 41 00: Demolition
2. Section 03 30 00: Concrete
3. Section 26 05 00: Electrical
4. Section 31 11 00: Clearing and Grubbing
5. Section 31 22 00: Grading and Excavating
6. Section 31 22 16: Base and Subgrade Treatment
7. Section 31 23 33: Trenching, Backfilling, and Compaction
8. Section 31 25 13: Soil and Erosion Control
9. Section 32 92 19: Temporary Seeding
10. Section 32 92 20: Permanent Seeding
11. Section 32 92 23: Sodding
12. Section 33 11 00: Water Distribution Systems
13. Section 33 30 00: Sanitary Sewerage Systems
14. Section 33 32 00: Sewer Pump Stations

PART 2 PRODUCTS

2.01 GENERAL

A. These specifications provide for the furnishing, installation, and ongoing operation of a complete air scrubber system for the control of atmospheric H^2S and other noxious odors. The scrubber system shall be equal to units as manufactured by Davis Water & Waste Industries, Process Division.

1. The scrubber shall consist of one wet scrubbing tower of a counter current air/liquid flow design capable of removing up to 300 ppm H^2S, single-component scrubbing solution feed system to deliver required, scrubbing action, an air handling system capable of treating the natural draft of contaminated atmosphere, sufficient chemical storage for 60-90 days continuous operation, and an enclosed control system capable of controlling all electrical equipment/controls for the scrubber.
2. The manufacturer of this equipment shall be one recognized and established in the design and production of odor scrubbers. Manufacturer shall provide a list of 10 similar sized scrubbers for the control of hydrogen sulfide and other malodorous compounds associated with municipal wastewater. The list shall include contact names, phone numbers, length of service, and design criteria. The scrubber manufacturer shall maintain regular production facilities at their place of business. These facilities shall be open for inspection by a representative of the customer any time during construction and testing of this equipment. The manufacturer of the air scrubber system shall be an Underwriters Laboratories listed manufacturer of industrial control panels.

B. Scrubber Specifications: Scrubber shall consist of one scrubbing section or tower designed to remove hydrogen sulfide and other noxious odors via counter current contact of contaminated air with an aqueous, single-component scrubbing solution. Scrubber design/operation shall provide for multiple passes of scrubbing solution to occur in the scrubbing section. Average residence time of scrubbing solution in scrubber shall not be less than one hour. The scrubber tower shall remove up to 300 ppm H^2S on a continuous basis under typical natural draft conditions. The scrubber tower shall consist of a packed column to provide for intimate air/liquid contact with a volume of no more than 12.5 cubic feet, a liquid sump section containing no more than 80 gallons of scrubbing solution, and liquid recirculation system consisting of one continuously operating external centrifugal pump, one inch PVC plumbing, and two anti-clog nozzles. Ready access shall be provided to the sump and packed column via a threaded 12 inch man way. Scrubber shall be rotationally molded of a high density cross linked polyethylene, all internal scrubber components shall be of polyolefin or stainless steel material of construction. Overall dimension of $SIMPLEX_{TM}$ scrubber shall not exceed 24 inches wide by 50 inches deep by 96 inches high.

C. Scrubbing Solution Feed System: Scrubbing Solution Feed System shall provide for

the continuous delivery of an aqueous solution to the scrubber. Feed system shall also provide for the intimate mixing of water and chemical (normally 10-15% sodium hypochlorite solution) upon introduction to the scrubber. Spent scrubbing solution shall be disposed of via approved sewage system and pH shall not exceed 9.5. Chemical feed shall be provided by a bellows type positive displacement fee pump with polypropylene bellows and Kel-F inlet and outlet poppet valves. Feed pump shall have a capacity range from 5 ml/min to 50 ml/min at discharge pressures up to 40 psi. Chemical feed to be controlled by a timer system. The timer shall turn the chemical feed pump on or off based upon pre-set limits to control the area odors. An ORP controller is optionally available. All feed lines shall be of polyolefin construction and resistant to alkaline chemical and solution. An in-line wye filter shall be included at the chemical storage tank. Chemical feed pump, scrubber solution fee control, and the time controller shall be housed in main control panel.

D. Air Handling System: Contaminated air shall be conveyed from source of odors by natural draft via 6 inch diameter PVC duct to scrubber, through SIMPLES$_{TM}$ scrubber, and clean air exited to atmosphere via 4 inch or 6 inch diameter PVC vent. Air sampling ports shall be provided on inlet and outlet air system to monitor scrubber performance and air flow.

E. Chemical Storage: Storage for chemical(s) shall be provided by a chemically inert, plastic drum. Volume of the drum shall provide for 60-90 days continuous operation. The standard drum holds 55 US gallons. Larger polyolefin tanks are available optionally.

F. Control System: Control system shall consist of 1) a 14" X 16" X 6" polyvinyl chloride enclosure with stainless steel hardware. The control box/system is mounted on the front of the SIMPLEX scrubber.

G. Control Box Shall Typically Contain:

1. 2 - 15 Amp Breaker, 115 volt
2. 3 - On/Off Switches with LED Indicator Lights
3. 1 - Chemical Feed Pump with Suction Line Check Valve
4. 1 - Time Controller
5. 1 - Electrical Sump Heaters

H. Foundation and Utilities:

1. Furnish and install a 6 inch think, reinforced monolithic concrete pad of size and dimensions as recommended by the equipment manufacture. Slab to be complete with reinforced footers and installed below the normal front lines.
2. Electrical: Furnish and install sufficient power to provide operation for all electrical components of scrubber system as recommended by equipment supplier. Separate circuit(s) at power service is required.
3. Portable Water: Furnish and install 3/4 inch water supply with a reduced

pressure back flow preventer at scrubber location. Water supply must provide for a minimum of 30 psi continuous pressure and a hardness not to exceed 100 mg/L as $CaCO^3$, and be protected from freezing.

4. Drain: Furnish and install a 1 1/4 inch PVC gravity drain to the sewer pump station for disposal of spent scrubbing solution and foundation drain.

I. Warranty and Guarantee: The scrubber system, complete to be free from defects in materials and workmanship for a period of 1 year from date on installation. In addition, the scrubber tower shall be warranted for a period of 5 years.

J. Service: The manufacture shall oversee installation of the Air Scrubber, as specified above, start-up scrubber to achieve specified odor control, and provide training of personnel in scrubber operation for optimum scrubber performance.

PART 3 EXECUTION

3.01 MEASUREMENT AND PAYMENT - SELF CONTAINED AIR SCRUBBER

A. Air Scrubber shall be measured by the number installed and accepted.

B. If provided for on the Bid Form, Air Scrubber as above stipulated shall be paid for at the Contract unit price per each installed and accepted. If not provided for on the Bid Form, payment for Air Scrubber shall not be made directly, but shall be included in the payment for the items with which it is associated.

END OF SECTION

SECTION 33 40 00

STORM DRAINAGE SYSTEMS

PART 1 GENERAL

1.01 WORK INCLUDED

A. Installation of storm drainage system.

1.02 RELATED WORK

A. Specified elsewhere:

1. Section 03 30 00: Concrete
2. Section 31 23 33: Trenching, Backfilling and Compaction
3. Section 33 05 10: Separation of Piped Utilities
4. Section 33 05 23: Boring and Jacking

PART 2 PRODUCTS

A. Only Class 3 (reinforced) concrete pipe products shall be used under streets and or roadways. Concrete or masonry boxes shall be used to separate different pipe products.

2.01 CONCRETE PIPE (CP)

A. Culverts: AASHTO M-170 or ASTM C-76

B. Elliptical Culverts: AASHTO M-207 or ASTM C-507

C. Reinforced Low-Head: ASTM C-361

2.02 VITRIFIED CLAY PIPE (VCP)

A. Culverts: ASTM C-700, extra strength

2.03 CORRUGATED PLASTIC AND POLYETHYLENE PIPE

A. AASTHO M-252

B. Flexible extruded pipe with circular or slotted perforations

2.04 CORRUGATED METAL PIPE (GALVANIZED) (CMP)

A. Corrugated Metal Pipe: AASHTO M-36, Type I

B. Corrugated Metal Pipe Arches: AASHTO M-36, Type II

C. Structural Plate for Pipes, Pipe Arches, and Arches: AASHTO M-167 for galvanized corrugated structural plates and fasteners.

2.05 CORRUGATED ALUMINUM ALLOY

A. Corrugated Aluminum Pipe: AASHTO M-196, Type I pipe.

B. Corrugated Aluminum Pipe Arches: AASHTO M-196, Type II.

C. Aluminum Alloy Structural Plate: AASHTO M-219.

2.06 CONCRETE MATERIALS

A. Class "A" in accordance with Section 03 30 00.

2.07 BRICK

A. AASHTO M-91 or ASTM C-32 for the grade specified.

B. Clay or shale, Grade MS or MM.

C. Test brick by AASHTO T-32.

2.08 MASONRY CEMENT

A. AASHTO M-150, ASTM C-91.

B. Methods of sampling and testing of masonry cement, when required, shall be by the methods of AASHTO:

Sampling	T-127
Fineness	T-192
Normal Consistency	T-129
Soundness	T-107
Time of Setting	T-154
Specific Gravity	T-133
Staining Test	T-105
Compressive Strength	T-106
Plastic Consistency	T-162
Air Content	T-137
Mixing of Mortar	T-162

C. Fine Aggregate: AASHTO M-45 consisting of hard, strong, durable uncoated mineral or rock particles free from injurious amounts of organic or other deleterious substances.

1. Sand for mortar shall be uniformly graded from coarse to fine within the following limits:

Sieve Size	Percent Passing by Weight
8	10
50	15-40
100	0-10
200	0-5

2. Methods of test for fine aggregate, when required, shall be by the following methods of AASHTO:

Sampling	T-2
Organic Impurities	T-21
Mortar Making Properties	T-71
Sieve Analysis	T-27
Material Passing 200 Sieve	T-11

D. Mix mortar in the following proportions:

1. 1 part masonry cement
2. 2 parts fine aggregate
3. Hydrated lime not exceeding 10% of the cement used
4. Water free of injurious substances, added to form a stiff workable paste.

2.09 CASTINGS FOR FRAMES, GRATES AND COVERS

A. Gray Iron, Class 30, AASHTO M-108

B. Bituminous paint finish not affected by hot or cold weather.

PART 3 EXECUTION

3.01 PREPARATION

A. Prior to laying pipe, prepare a suitable bedding according to Section 31 23 33.

B. Before placing pipe in the trench, field inspect for cracks or other defects; remove defective pipe from the construction site.

C. Swab the interior of the pipe to remove all undesirable material.

D. Prepare the bell end and remove undesirable material from the gasket and gasket recess.

3.02 INSTALLING STORM SEWER PIPE

A. Lay pipe in a straight line on a uniform grade from structure to structure with the bell or groove end upgrade.

B. Firmly support each section through out its length and form a close concentric joint with the adjoining pipe.

C. Make junctions and turns with standard or special fittings.

D. Do not open up more trench at any time than pumping facilities are able to dewater.

E. Whenever the work ceases, close the end of the pipe with a tight fitting plug or cover.

F. All storm sewer pipes shall be constructed to give a mean velocities, when flowing full, of not less than 3.0 feet per second.

3.03 CAST-IN-PLACE CONCRETE CATCH BASINS

A. Perform all concrete construction in accordance with Section 03 30 00.

B. Inverts: Class A concrete of the shapes indicated on the Plans and constructed to cause the least possible resistance to flow. The shape of the inverts shall conform uniformly to inlet and outlet pipes with a smooth and uniform finish.

3.04 BRICK CATCH BASINS

A. Do not construct brick masonry in freezing weather nor when the bricks contain frost.

B. Select brick for exposed surfaces, corners, etc., from brick approved for color and uniformity.

C. All brick and the receiving bed shall be thoroughly cleaned and well moistened with water immediately before being laid.

D. Lay all brick in freshly made mortar, in a substantial and workmanlike manner and true to the liens and grade indicated on the Plans.

E. Arrange headers and stretchers to thoroughly bond the masonry and, unless otherwise indicated or directed, alternate headers and stretchers with consecutive

courses breaking joints.

F. Face joints shall be neatly struck, using the weather joint.

G. Finish joints properly as the laying of brick progresses with each not less than 1/4" nor more than 1/2" in thickness.

H. Do not use spalls or bats except in shaping around irregular openings or when unavoidable to finish out a course, in which case, place a full brick at the corner and the bat in the interior of the course.

I. Filling materials for the interior of the walls shall be of the same quality as used in the face of the unit, unless otherwise indicted on the Plans.

J. The surface of brick masonry against which embankment or backfill is to be placed, shall be neatly plastered with mortar to a thickness of not less than 1/2", and the mortar shall be finished to a true and uniform surface. The mortar shall be protected and kept wet for 48 hours after completion.

3.05 CATCHBASIN - INLET AND OUTLET PIPES

A. Extend inlet and outlet pipes through the walls of catch basins, for a sufficient distance beyond the outside surface to allow for connections, cut off flush with the wall on the inside surface, unless otherwise directed.

B. The concrete or brick and mortar shall be so constructed around the pipes as to prevent leakage and form a neat connection.

3.06 CASTINGS AND FITTINGS

A. Handle in a manner which prevents damage. Reject all damaged castings and fittings.

B. Place all castings and fittings in the positions indicated on the Plans and set true to line and grade.

C. If castings are to be set in concrete or cement mortar, place all anchors or bolts and position before the concrete or mortar. The casting shall not be disturbed until the mortar or concrete has set.

D. When castings are to be placed upon previously constructed masonry, the bearing surface of masonry shall be brought true to line and grade and present an even bearing surface in order that the entire face or back of the casting contacts the masonry. Castings shall be set in mortar beds or anchored to the masonry as indicated on the plans.

E. All castings shall be set firm and snug and shall not rattle.

3.07 MEASUREMENT AND PAYMENT - CATCHBASINS

A. Catch basins shall be measured for payment by the number installed and accepted including excavation, steel reinforcing, brick masonry, concrete, castings and fittings.

B. When provided for on the Bid Form, catch basins as above stipulated shall be paid for at the Contract unit price per each for the various type and depth classifications shown on the Bid Form. When not provided for on the Bid Form, payment for catch basins shall not be made directly, but shall be included in the payment for the items with which it is associated.

3.08 MEASUREMENT AND PAYMENT - STORM SEWERS

A. Pipe for storm sewers, of the various kinds, types and sizes, shall be measured by the linear foot of pipe installed and accepted.

B. When provided for on the Bid Form, accepted quantities of storm sewers, measured as provided for above, shall be paid for at the contract unit price per linear foot of pipe of each kind and size, including incidental appurtenances, complete in place. When not provided for on the Bid Form, payment for storm sewers shall not be made directly, but shall be included in the payment for the items with which it is associated.

END OF SECTION

SECTION 34 41 00

HIGHWAY SIGNS

PART 1 GENERAL

1.01 WORK INCLUDED

A. Construction of foundations and supports.

B. Fabricating, assembling, and erecting ground mounted highway signs.

PART 2 PRODUCTS

2.01 ALUMINUM SIGNS

A. Flat Sheets and Plates

1. Alloy 6061-T6 or 5052-H38 meeting the requirements of ASTM B-209.
2. Size and sheet thickness to be as shown on the drawings.

2.03 STEEL SIGNS

A. Flat Sheet and Plates: ASTM A-36 and ASTM A-123.

B. Mounting Hardware: ASTM a-307 and ASTM A-153.

2.04 REFLECTIVE SHEETING

A. AASHTO M-268. Colors shall conform to the "Tennessee Manual on Uniform Traffic Control Devices for Streets and Highways", January, 1979, and all revisions thereto.

2.05 FABRICATION

A. Preparation of sign surfaces, application of reflective sheeting, painting and handling shall conform to the Tennessee Department of Transportation's "Standard Specifications for Road and Bridge Construction".

2.06 SIGN SUPPORTS

A. Required lengths and weights of posts are shown on the drawings.

B. Supports shall be one of the following:

1. U-shaped steel posts: ASTM A-499 and ASTM A-123.
2. Steel square tube perforated posts: ASTM A-446 and ASTM A-123.
3. U-shaped aluminum -alloy posts: ASTM B-221, alloy 6061, T6.

PART 3 EXECUTION

3.01 ERECTION

A. Construct highway signs and devices in accordance with the "Tennessee Manual on Uniform Traffic Control Devices for Streets and Highways", January, 1979, and all revisions thereto.

B. Construct signs at the locations and within reasonably close conformity to the lines and grades indicated on the Plans or as otherwise directed by the Engineer of Record.

3.02 MEASUREMENT AND PAYMENT - HIGHWAY SIGNS

A. Highway signs shall be measured for payment by the number installed and accepted including excavation, steel reinforcing, concrete, delineators, steel posts, sign materials and fittings.

B. When provided for on the Bid Form, highway signs as above stipulated shall be paid for at the Contract unit price per each for the various type and size classifications shown on the bid form. When not provided for on the Bid Form, payment for highway signs shall not be made directly, but shall be included in the items with which it is associated.

END OF SECTION

SECTION 34 71 13

GUARDRAILS

PART I GENERAL

1.01 WORK INCLUDED

A. Constructing anchor blocks and approach ends.

B. Guardrail assembly including appurtenant work to make connections to existing structures, if required.

PART 2 PRODUCTS

2.01 METAL BEAM RAILS

A. Corrugated sheet steel made of open hearth or electric furnace steel shaped into a "W" shaped beam with a projected width of not less than 12 inches and a depth of not less than 3 inches.

B. Class "A" guardrail: not less than 10 gauge; Class "B" guardrail not less than 12 gauge.

C. Blanked to proper shape, fabricated, and ready for assembly when delivered. No punching, drilling, cutting or welding shall be permitted in the field.

D. Straight, uniform sections rolled or rounded to eliminate sharp edges. Reject warped or deformed plates.

E. Holes in the beam at posts shall be slotted to facilitate erection and permit expansion and contraction.

F. All steel guardrail members shall be marked by the manufacturer or fabricator indicating brand name, gauge, weight, coating weight per square foot, and manufacturers heat number.

G. Requirements for Beam Strength:

		Traffic Face Up		Traffic Face Down	
Class	Gauge of Sheet	Load, lb.	Deflection, in.	Load, lb.	Deflection, in.
A	10	2000	2.0	1600	2.0
A	10	3000	3.0	2400	3.0
B	12	1500	2.0	1200	2.0
B	12	2000	3.0	1600	3.0

2.03 TERMINAL OR END SECTIONS

A. Formed from open hearth or electric furnace steel with a thickness not less than 12 gauge material.

2.04 POSTS

A. Copper bearing steel "H" sections conforming to ASTM A-36 and galvanized in accordance with ASTM A-123.

2.05 GUARDRAIL HARDWARE

A. Splice bolts, anchor bolts, and nuts shall conform to the requirements of ASTM A-307 and shall be galvanized in accordance with ASTM A-153.

B. End caps, splice joints, anchor assemblies and all other items to complete the railing shall meet the requirements of ASTM A-36 and shall be galvanized in accordance with AASHTO M-111 or ASTM A-153.

2.06 GUARDRAIL DIMENSIONS

A. In accordance with Tennessee Department of Transportation standard drawings S-GR-l through 10 inclusive, and M-42-151 through 155 inclusive.

PART 3 EXECUTION

3.01 POSTS

A. Set all posts reasonably true to the lines and grades shown on the plans or established by the City Engineer or his agent.

B. Dig or drill holes to the depth indicated on the plans; or drive posts by approved methods and equipment, provided the posts are in the proper position and free of distortion and burring or any other damage.

1. Size all post holes which are dug or drilled to permit proper setting of the posts, and allow sufficient room for backfilling and tamping.
2. Backfill and tamp holes with selected earth or other suitable materials in layers not to exceed 4 inches in thickness. When backfilling and tamping is completed, the posts or anchors shall be held securely in place.
3. Backfill post holes which are drilled in rock and holes for anchor posts or devices shall be backfilled with concrete.

3.02 MEASUREMENT AND PAYMENT

A. Measurement for payment of guardrails installed and accepted including all appurtenances shall be by the linear foot.

B. When provided for on the Bid Form, payment for guardrails as stipulated above shall be by the Contract unit price for:

1. Guardrails: Per Linear Foot
2. Guardrail Anchors: Per each

a. When not provided for on the Bid Form, payment for guardrails shall not be made directly, but shall be included in the payment for the items with which it is associated.

END OF SECTION

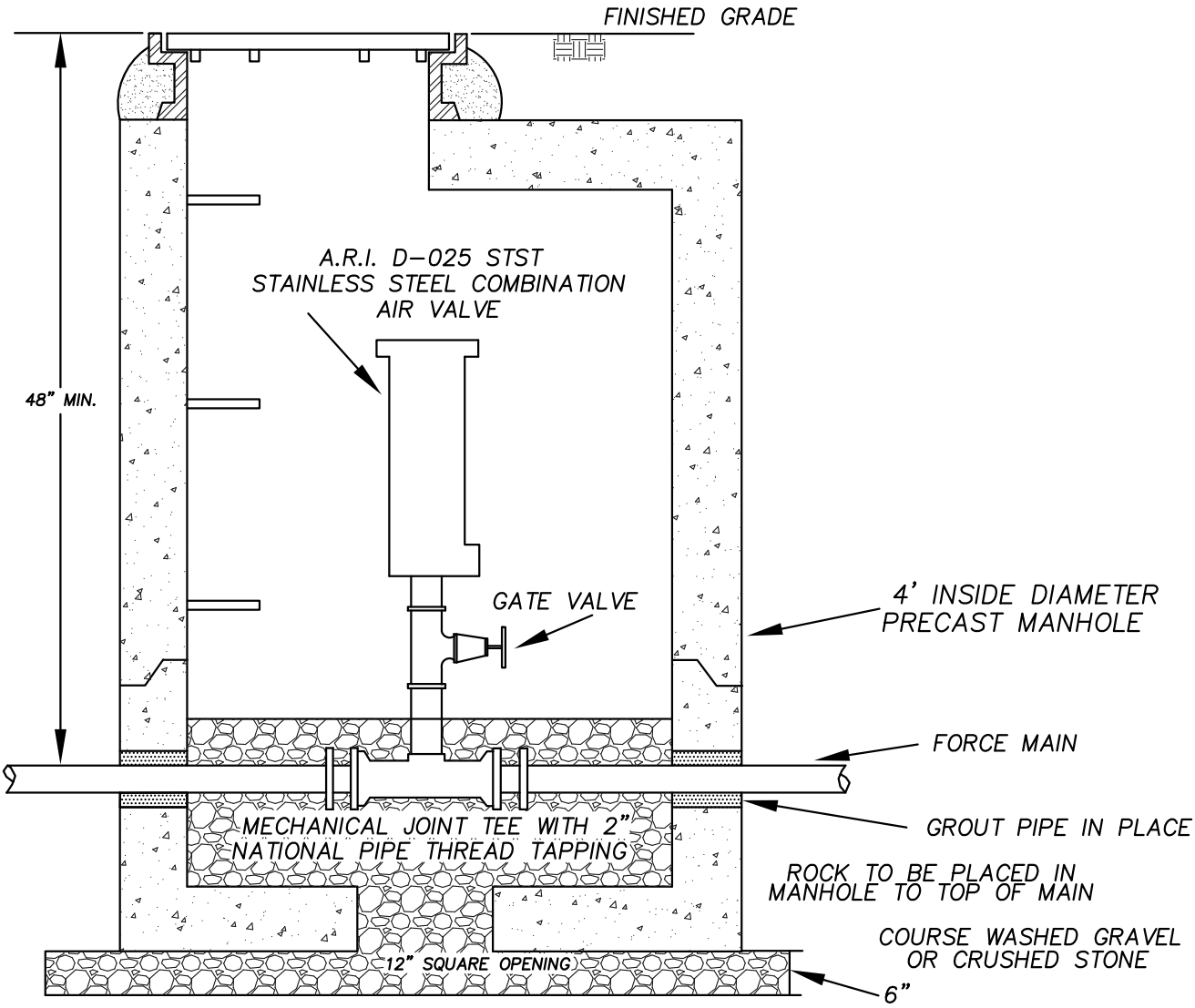

DRAWING TITLE	SCALE	DRAWING NO.	REV.
DETAIL AIR RELEASE VALVE	N.T.S.	A2.1	

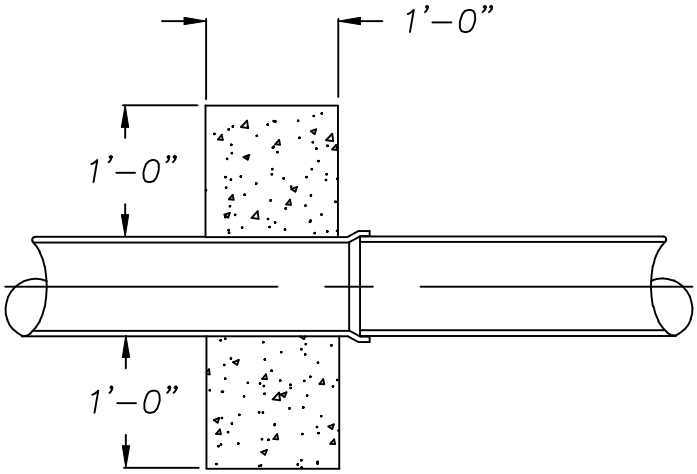

TYPICAL SECTION CONCRETE ANCHOR

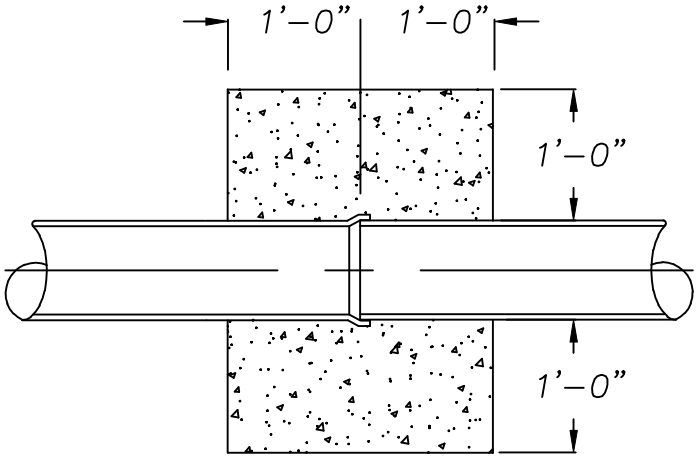

TYPICAL SECTION CONCRETE COLLAR

DRAWING TITLE	SCALE	DRAWING NO.	REV.
CONCRETE ANCHORS AND COLLARS	N.T.S.	A2.2	

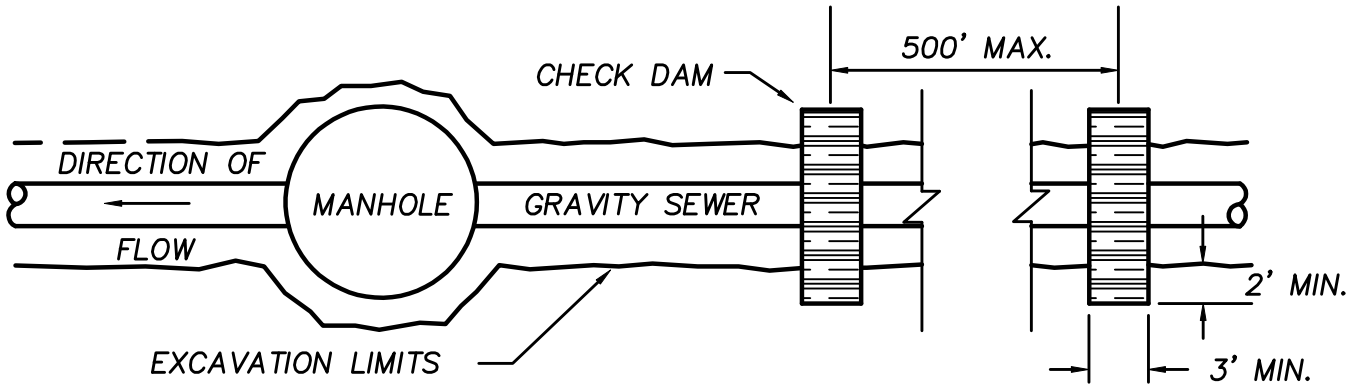

PLAN VIEW

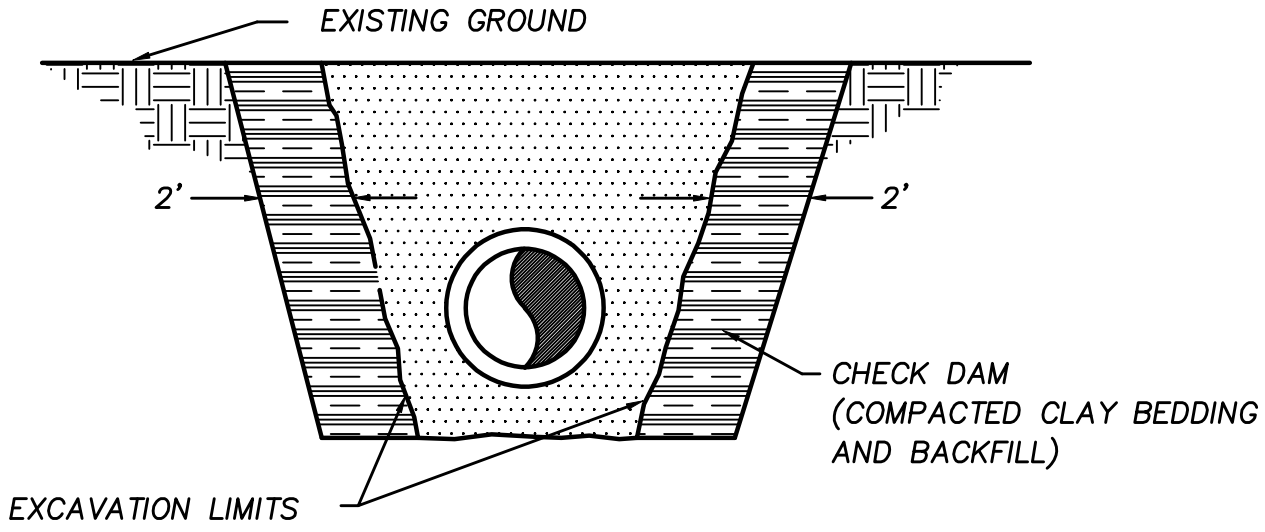

SECTION VIEW

CHECK DAMS

CHECK DAMS SHALL BE INSTALLED IN THE BEDDING AND BACKFILL OF ALL NEW OR REPLACED SEWER LINES TO LIMIT THE DRAINAGE AREA SUBJECT TO THE FRENCH DRAIN EFFECT OF GRAVEL BEDDING. MAJOR REHABILITATION PROJECTS SHOULD ALSO INCLUDE CHECK DAMS IN THE DESIGN. DAMS SHALL CONSIST OF COMPACTED CLAY BEDDING AND BACKFILL AT LEAST 3 FEET THICK TO THE TOP OF THE TRENCH AND CUT INTO THE WALLS OF THE TRENCH 2 FEET. ALTERNATIVELY, CONCRETE MAY BE USED, KEYED INTO THE TRENCH WALLS. DAMS SHALL BE PLACED NO MORE THAN 500 FEET APART. THE PREFERRED LOCATION IS UPSTREAM OF EACH MANHOLE. ALL STREAM CROSSINGS SHALL INCLUDE CHECK DAMS ON BOTH SIDES OF THE CROSSING.

DRAWING TITLE	SCALE	DRAWING NO.	REV.
CHECK DAMS	N.T.S.	A2.3	

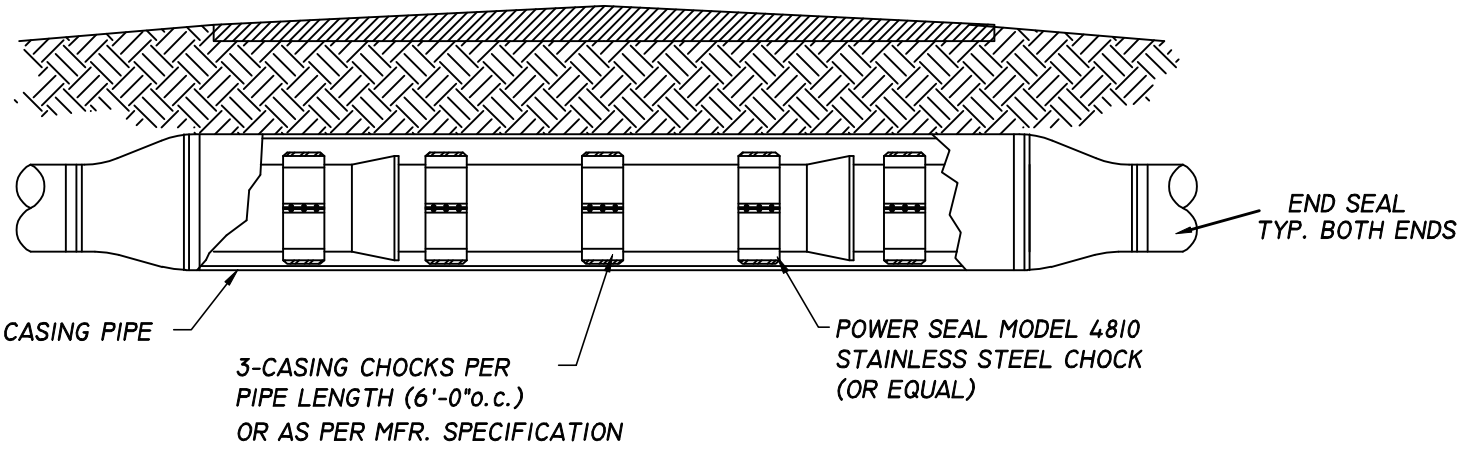

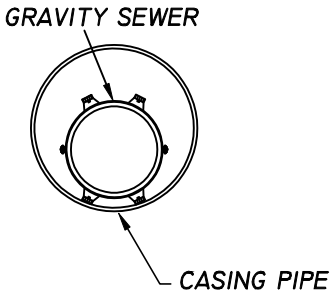

DRAWING TITLE	SCALE	DRAWING NO.	REV.
GRAVITY SEWER INSIDE STEEL CASING @ ROAD CROSSING	N.T.S.	A2.4	

CRUSHED STONE SHALL BE
95–100% PASSING 1/2" SIEVE
95–100% RETAINED ON NO. 4 SIEVE

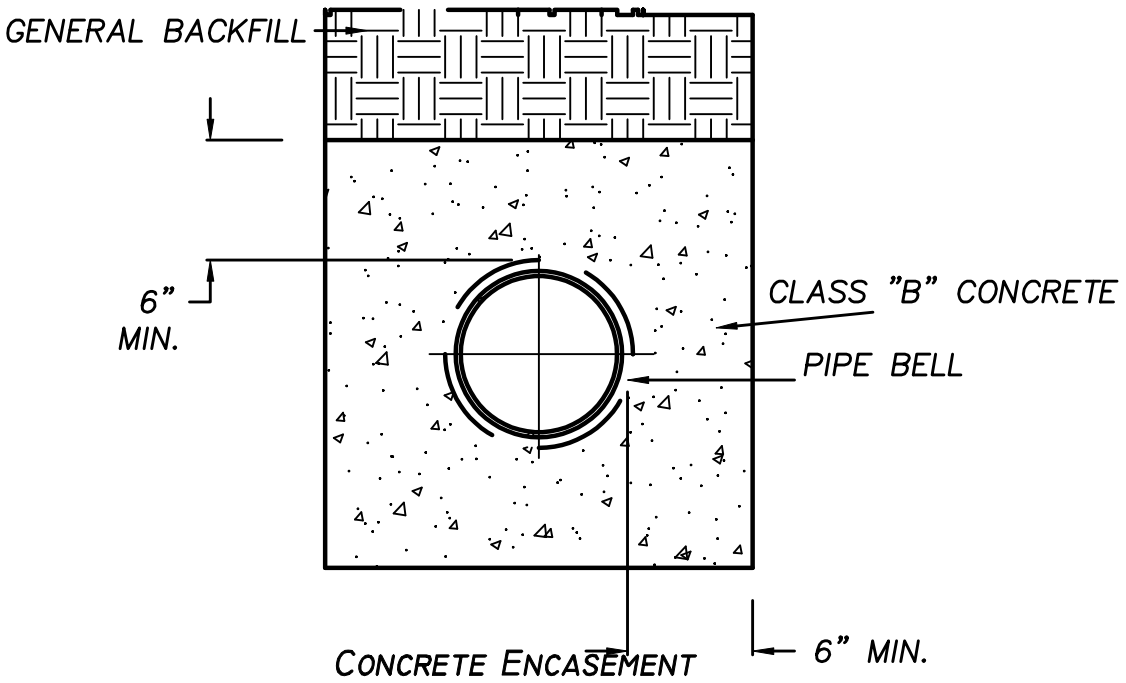

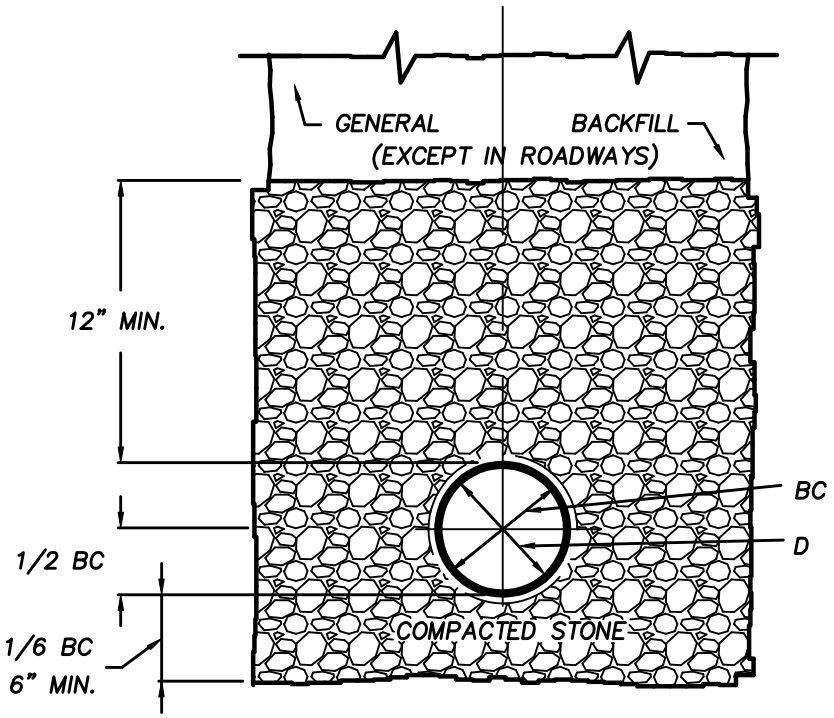

CLASS "A" BEDDING FOR PVC PIPE

DRAWING TITLE	SCALE	DRAWING NO.	REV.
PVC BEDDING; CONCRETE ENCASEMENT	N.T.S.	A2.5	

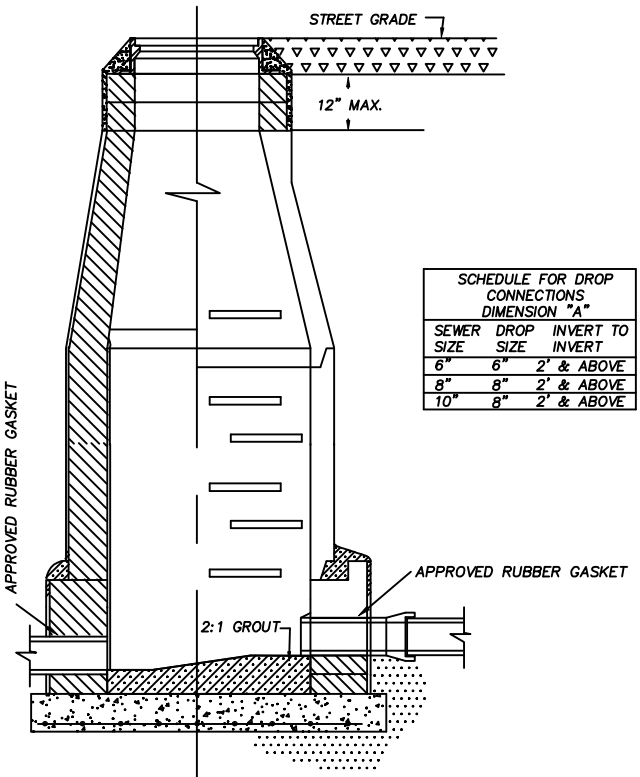

SCHEDULE FOR DROP CONNECTIONS DIMENSION "A"		
SEWER SIZE	DROP SIZE	INVERT TO INVERT
6"	6"	2' & ABOVE
8"	8"	2' & ABOVE
10"	8"	2' & ABOVE

FROM 0.5' TO 1.95'

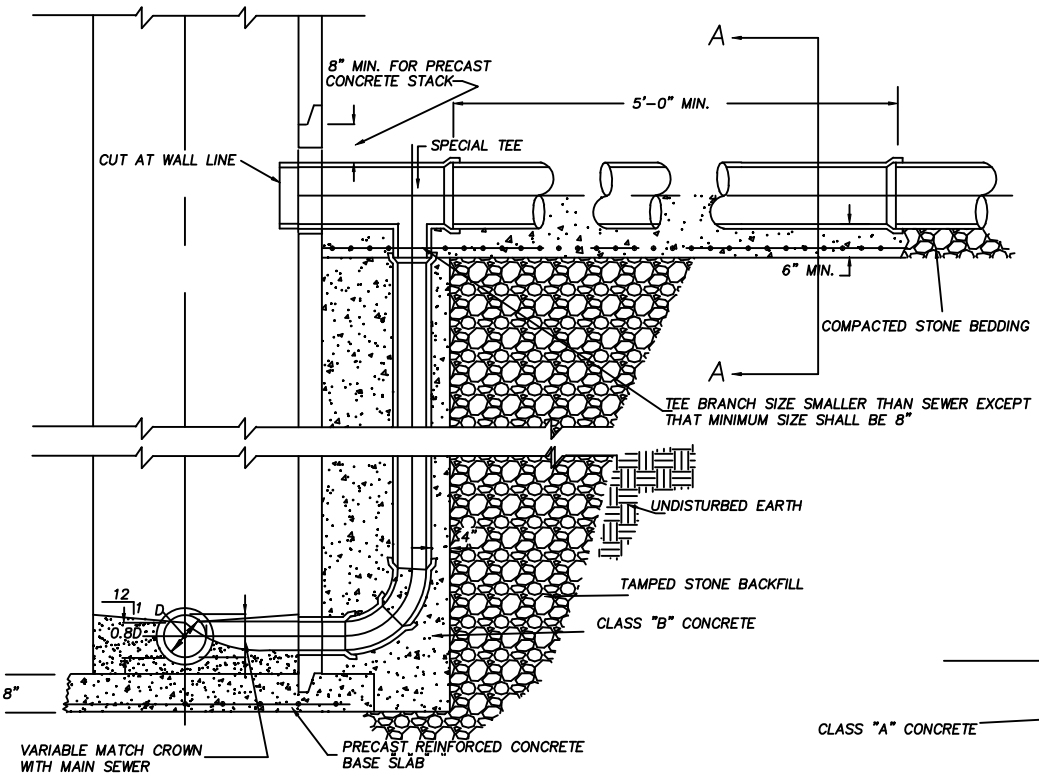

FROM 2' UP

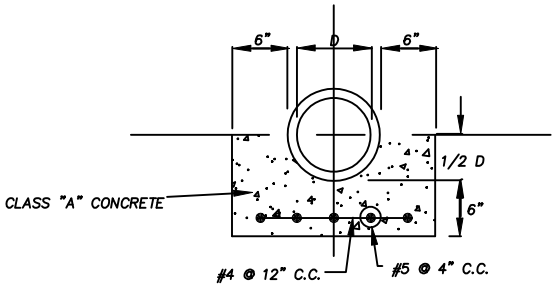

SECTION A-A

DRAWING TITLE	SCALE	DRAWING NO.	REV.
DROP MANHOLE CONNECTION: TYPICAL SECTIONS	N.T.S.	A2.6	

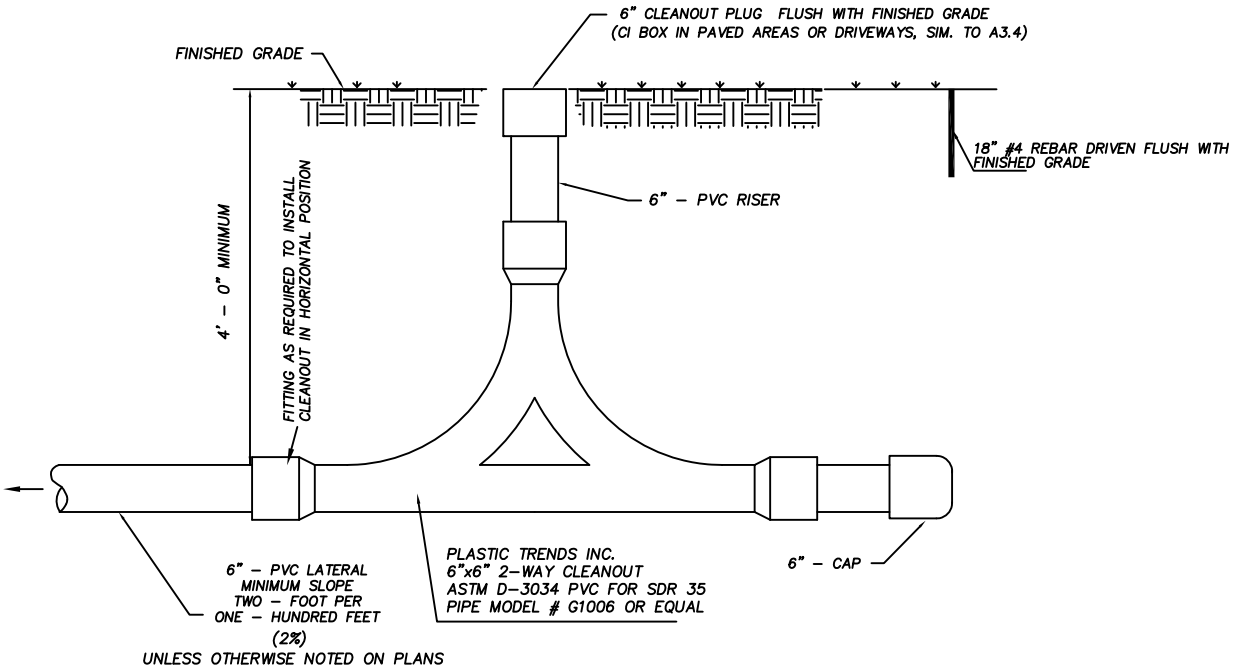

DETAIL OF FLUSH CLEANOUTS

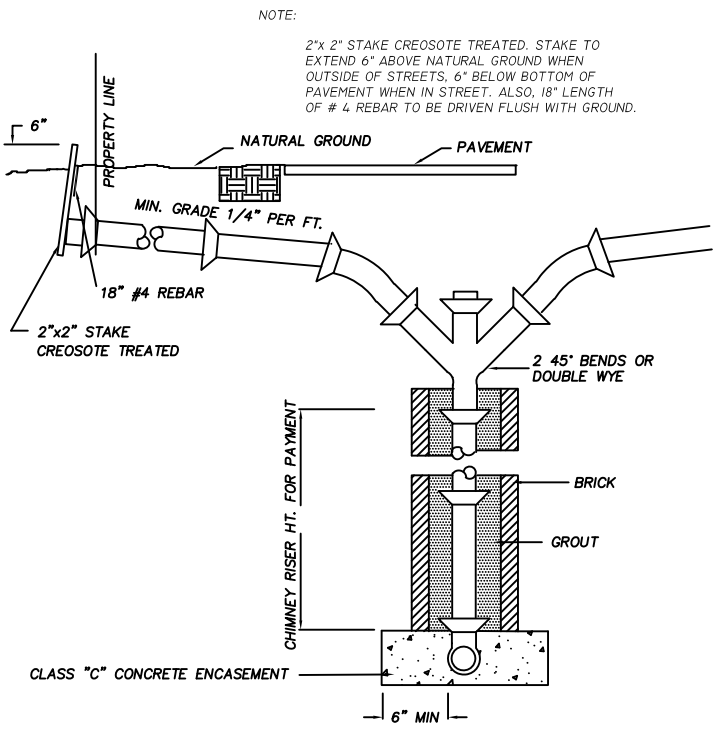

HALF SECTION TEE BRANCH

NOTE: CLEANOUT NOT SHOWN, SEE DETAIL ABOVE

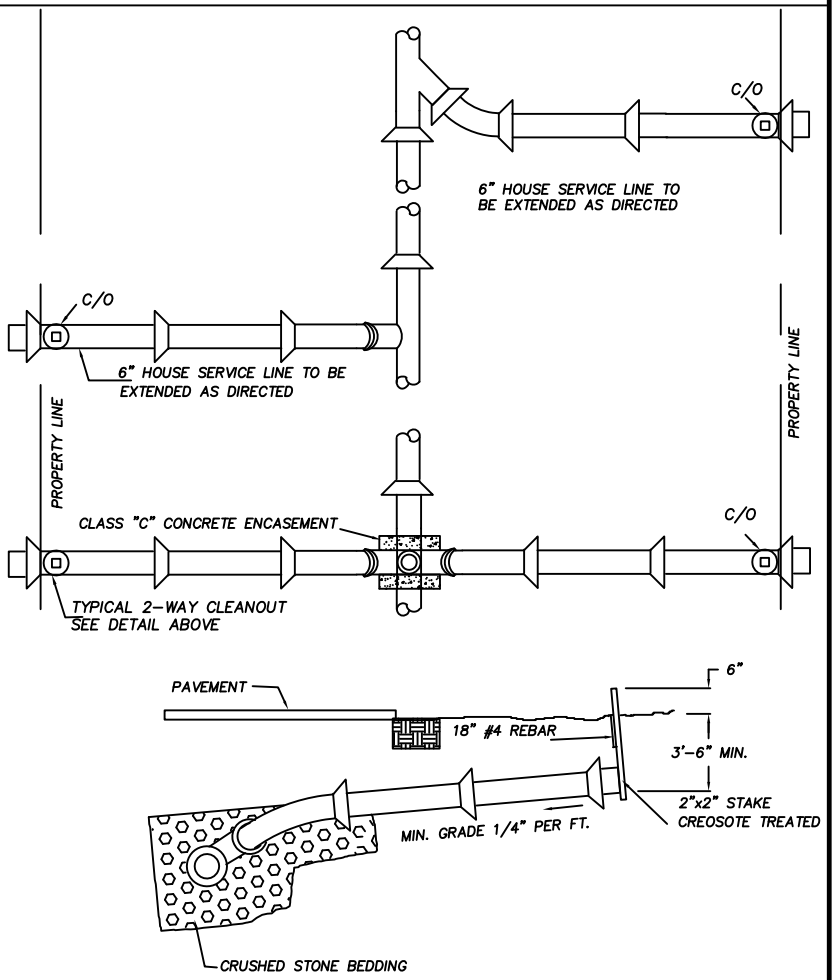

HALF SECTION WYE BRANCH

NOTE: CLEANOUT NOT SHOWN, SEE DETAIL ABOVE

TYPICAL DETAILS OF SANITARY HOUSE SERVICE LINE

DRAWING TITLE	SCALE	DRAWING NO.	REV.
FLUSH CLEANOUT / SERVICE LINE	N.T.S.	A2.7	1

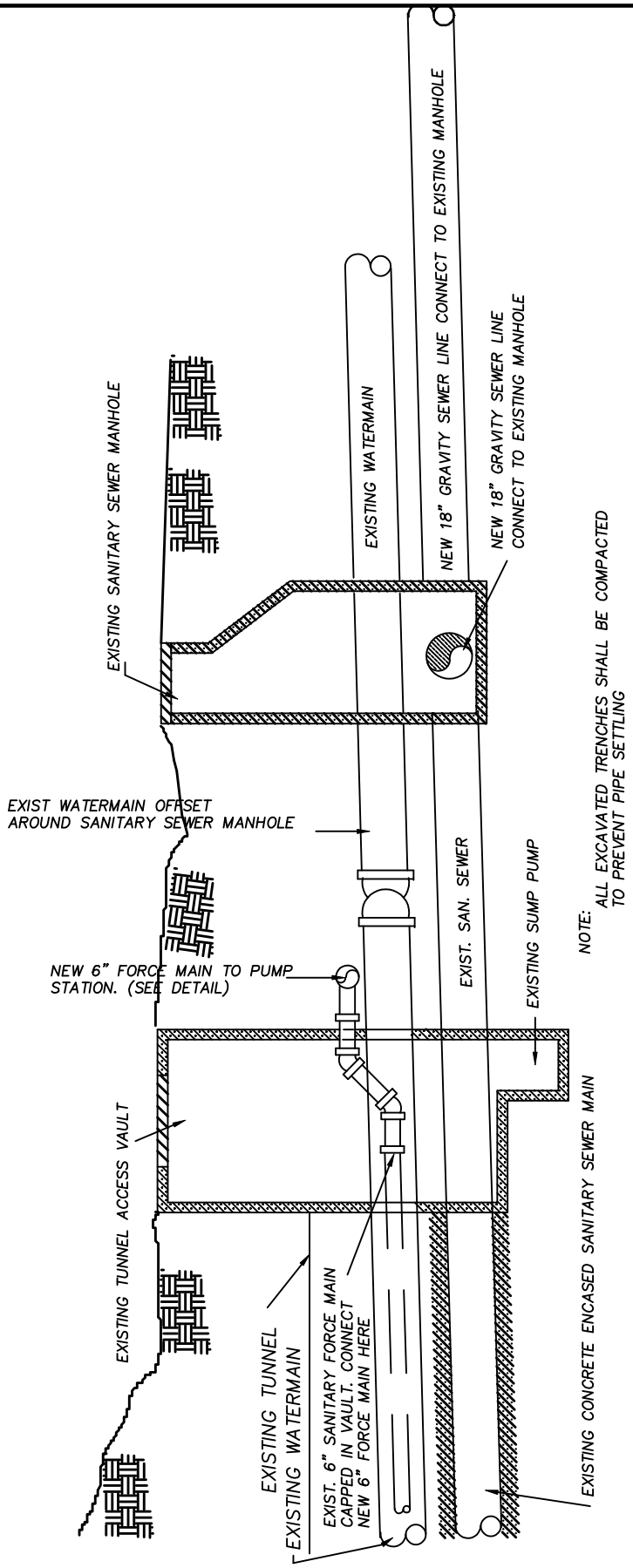

CONNECTION TO EXISTING FORCE MAIN LOCATED IN EXISTING TUNNEL ACCESS VAULT

DRAWING TITLE	SCALE	DRAWING NO.	REV.
TUNNEL ACCESS VAULT CONNECTION	N.T.S.	A2.8	

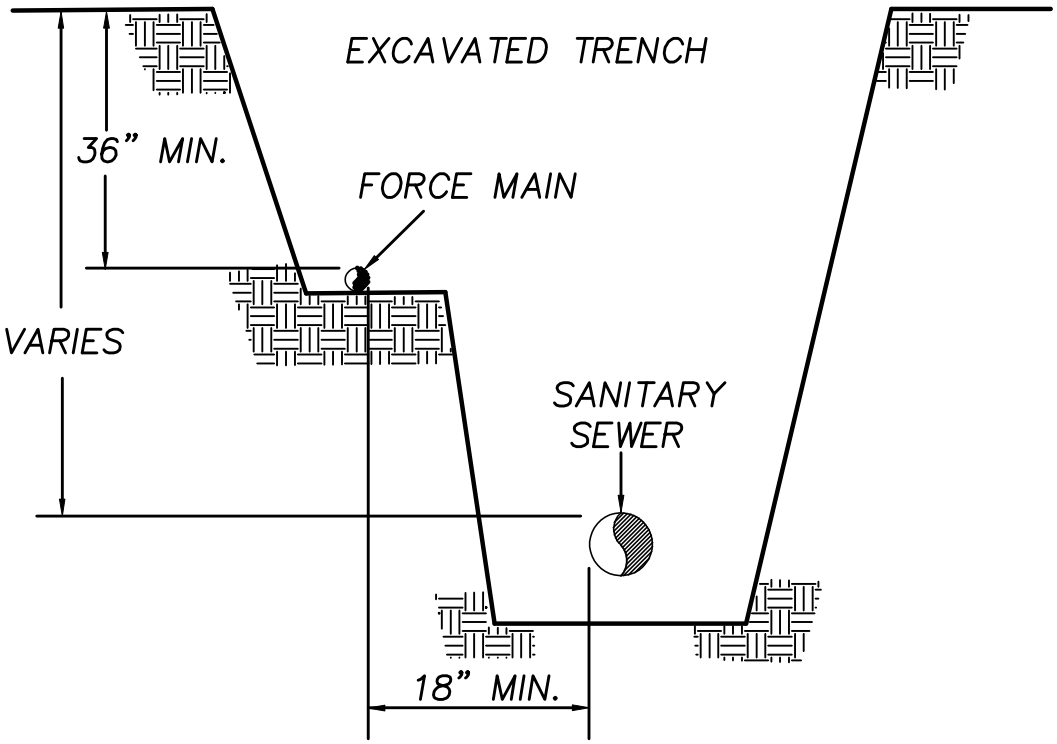

LOCATION OF FORCE MAIN AND GRAVITY SEWER IN EXCAVATED TRENCH

DRAWING TITLE	SCALE	DRAWING NO.	REV.
TRENCH DETAIL	N.T.S.	A2.9	

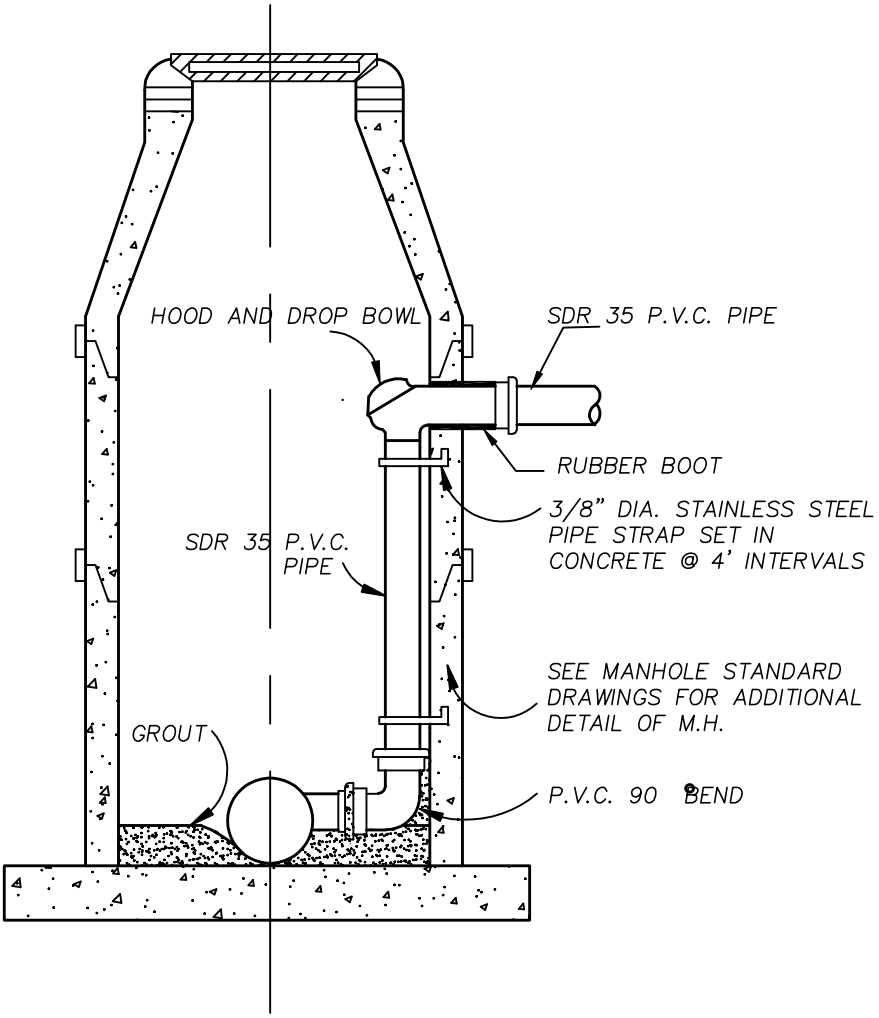

ELEVATION

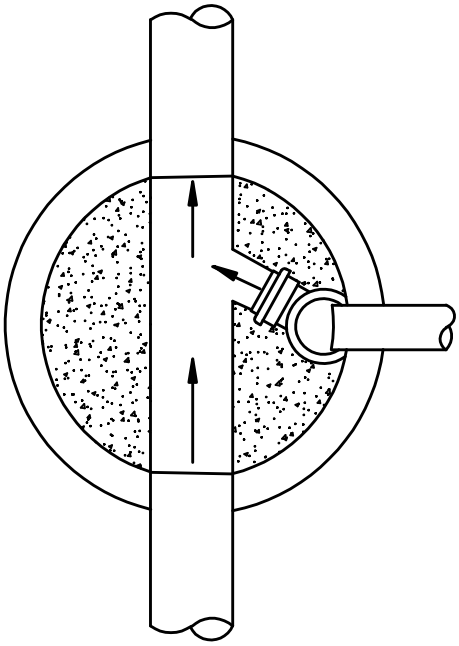

PLAN

NOTE:

FLOW LINE OF SURCHARGE LINE NORMALLY PLACED AT TOP OF EXISTING WASTEWATER LINE UNLESS NOTED OTHERWISE ON PLANS.

HOOD & DROP BOWLS BY:
RELINER-DURAN INC. OR EQUAL
53 MT. ARCHER RD
LYME, CT 06371
800-508-6001
WWW.RELINER.COM

SANITARY SEWER MANHOLE INSIDE DROP CONNECTION

DRAWING TITLE	SCALE	DRAWING NO.	REV.
INSIDE DROP CONNECTION	N.T.S.	A2.10	

GOVERNING DIMENSIONS FOR CIRCULAR MANHOLES			
PIPE SIZE	DEFLECTION	MH DIAMETER	"X"
8" & 15"	0° – 90°	4'–0"	1'–10"

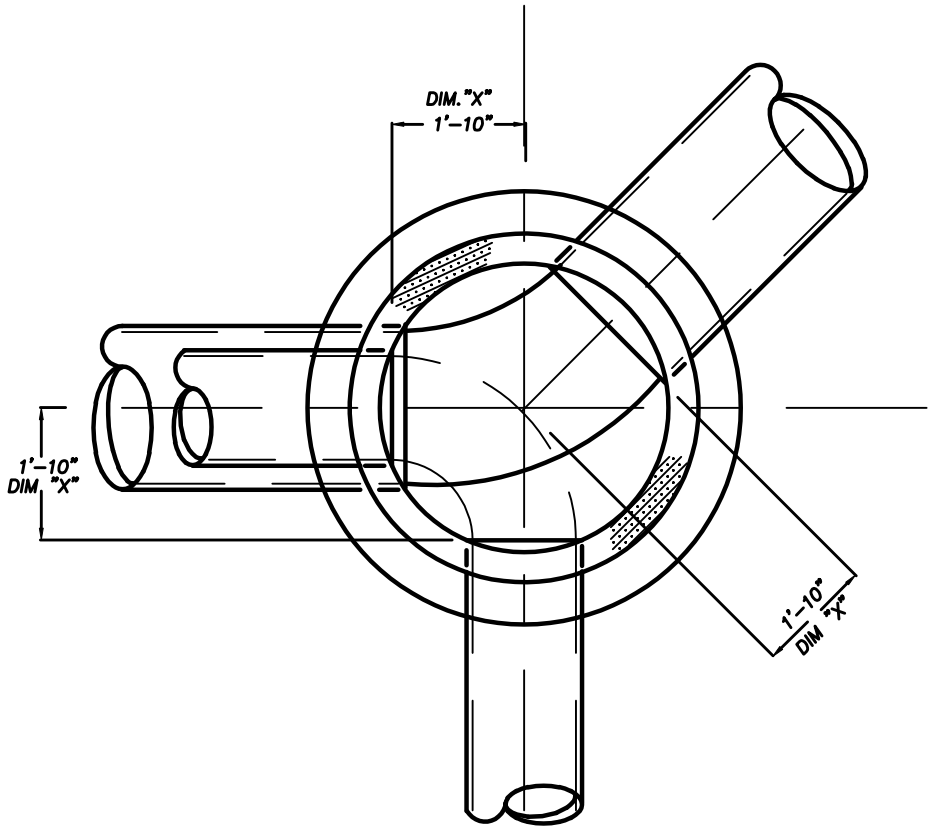

DRAWING TITLE	SCALE	DRAWING NO.	REV.
TYPICAL INVERT PLAN (ALL SIZES)	N.T.S.	A2.11	

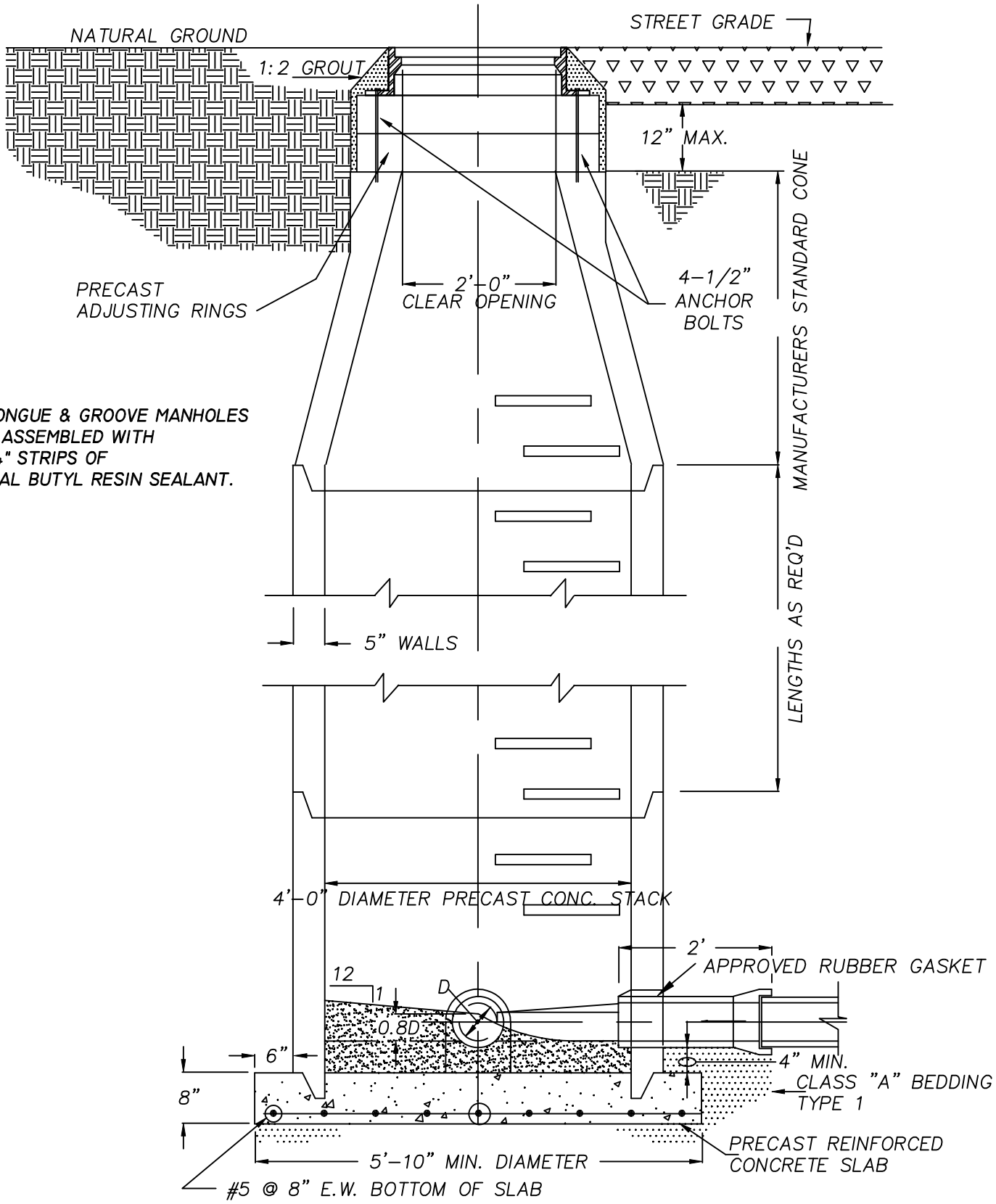

NOTE:
ALL TONGUE & GROOVE MANHOLES TO BE ASSEMBLED WITH 2 - 3/4" STRIPS OF CONSEAL BUTYL RESIN SEALANT.

DRAWING TITLE	SCALE	DRAWING NO.	REV.
4' DIAMETER PRECAST CONCRETE MANHOLE	N.T.S.	A2.12	

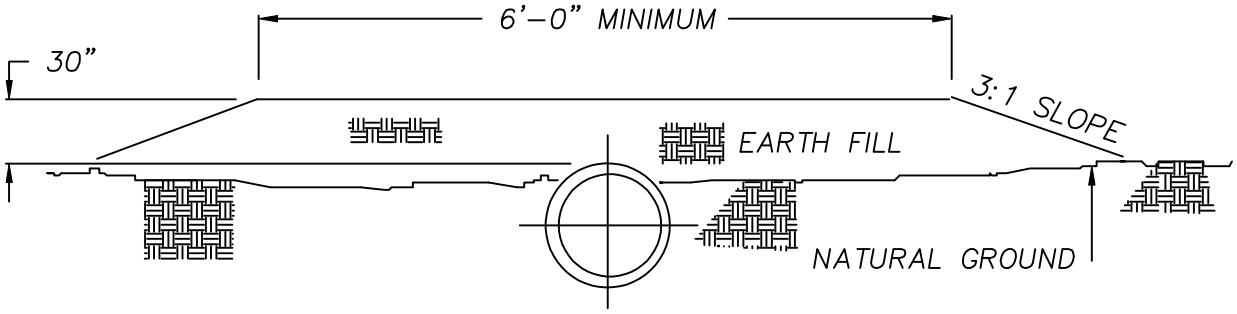

TYPICAL DETAIL EARTH FILL OVER SEWER PIPE

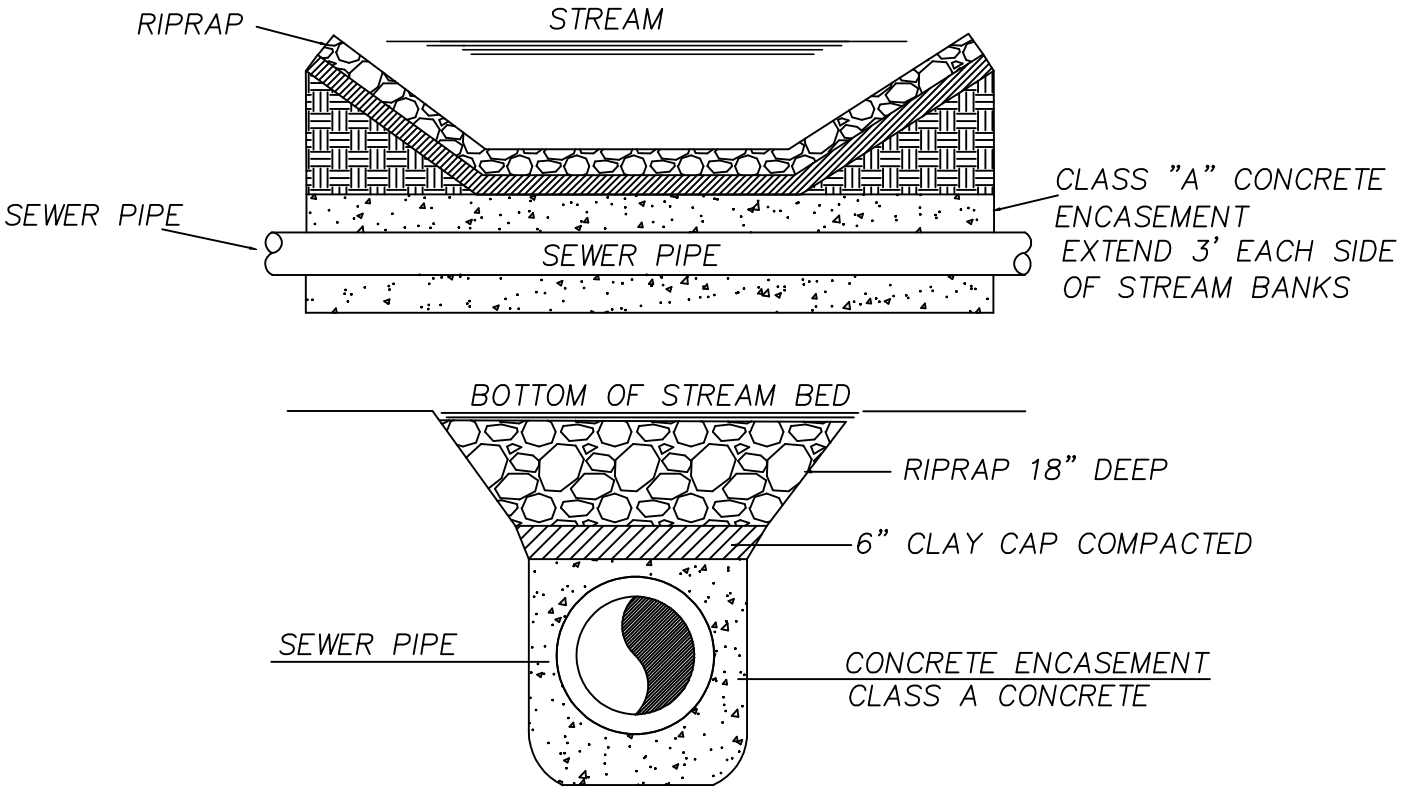

BACKFILL DETAIL FOR CREEK CROSSINGS

DRAWING TITLE	SCALE	DRAWING NO.	REV.
BACKFILL DETAILS OVER SEWER PIPE	N.T.S.	A2.13	

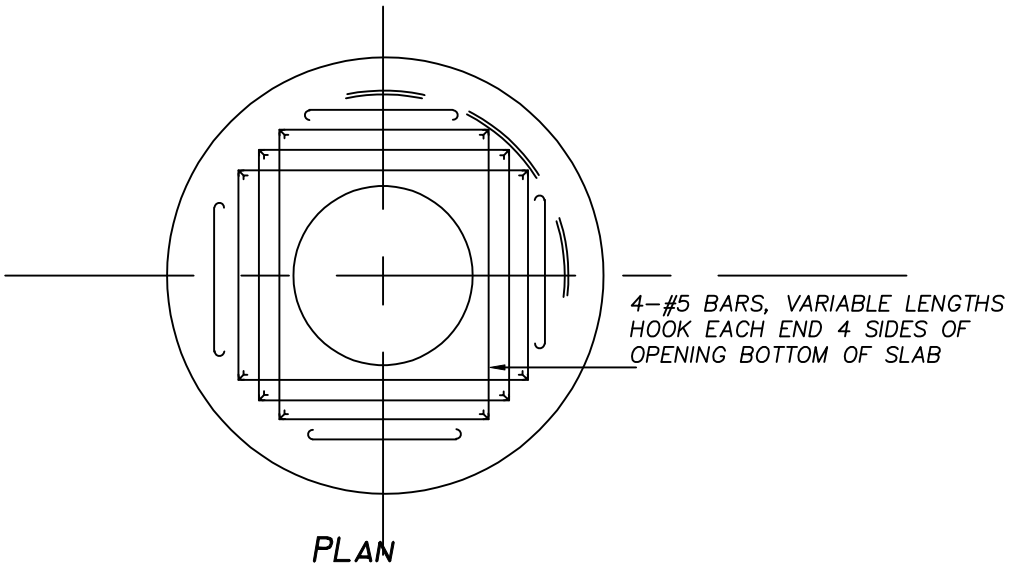

PLAN

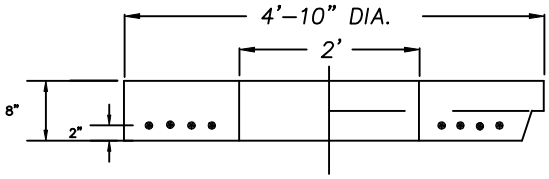

SECTION, 4' COVER SLAB

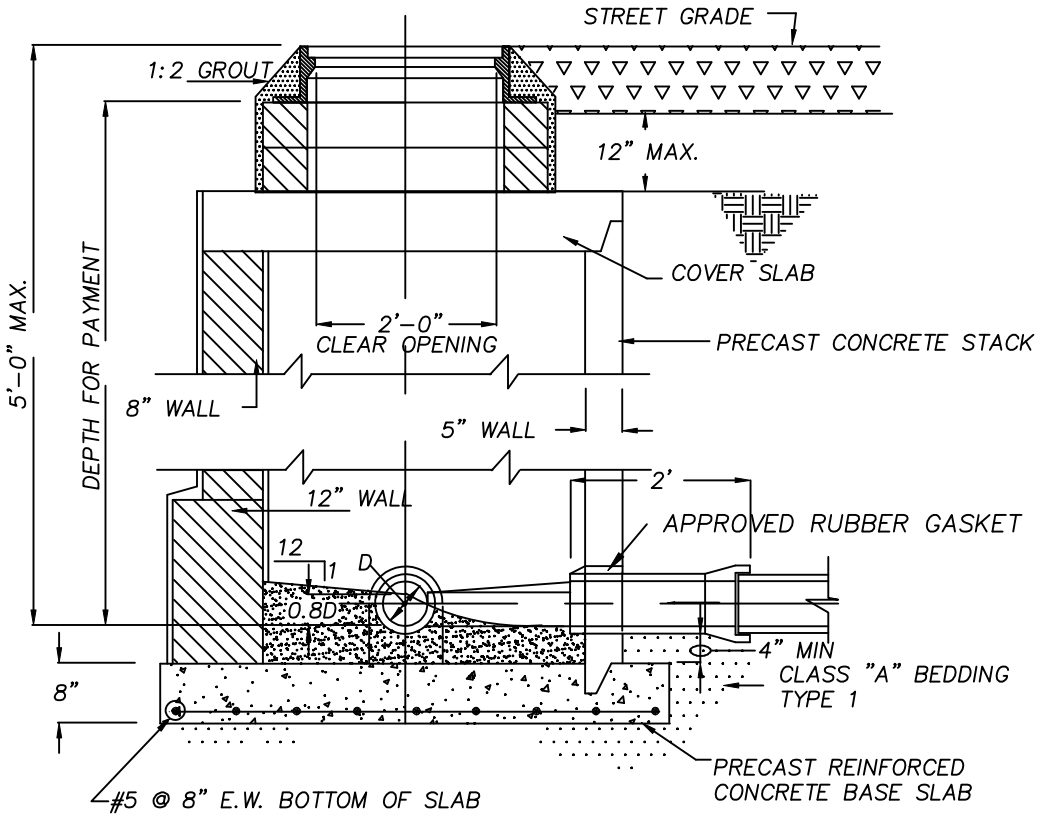

SECTION, USING PRECAST CONCRETE STACK

DRAWING TITLE	SCALE	DRAWING NO.	REV.
TYPICAL 4' SHALLOW MANHOLE	N.T.S.	A2.14	

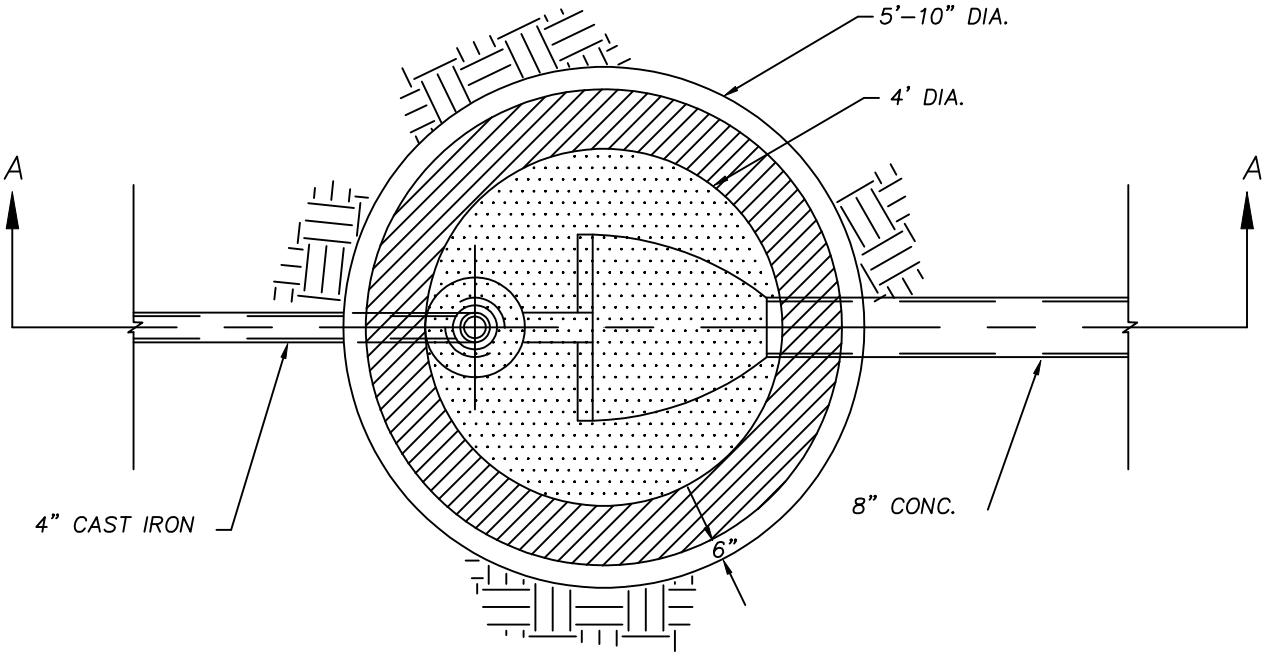

PLAN

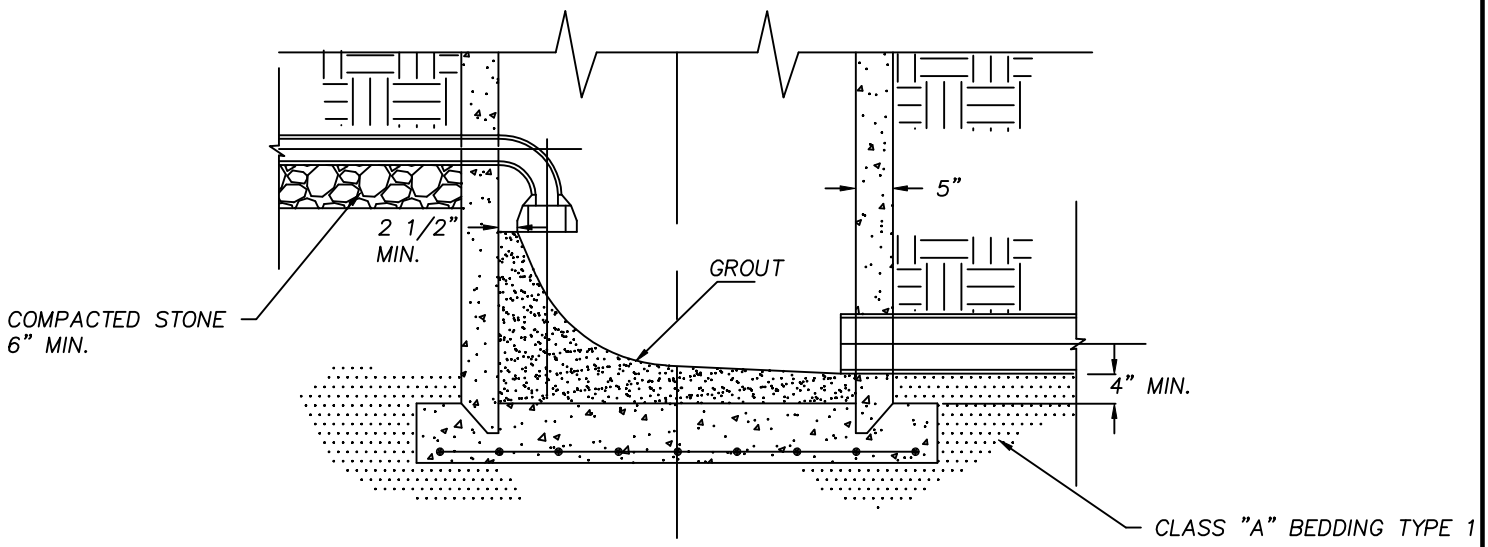

SECTION A:A

DRAWING TITLE	SCALE	DRAWING NO.	REV.
SANITARY SEWER MANHOLE FORCE MAIN CONNECTION	N.T.S.	A2.15	

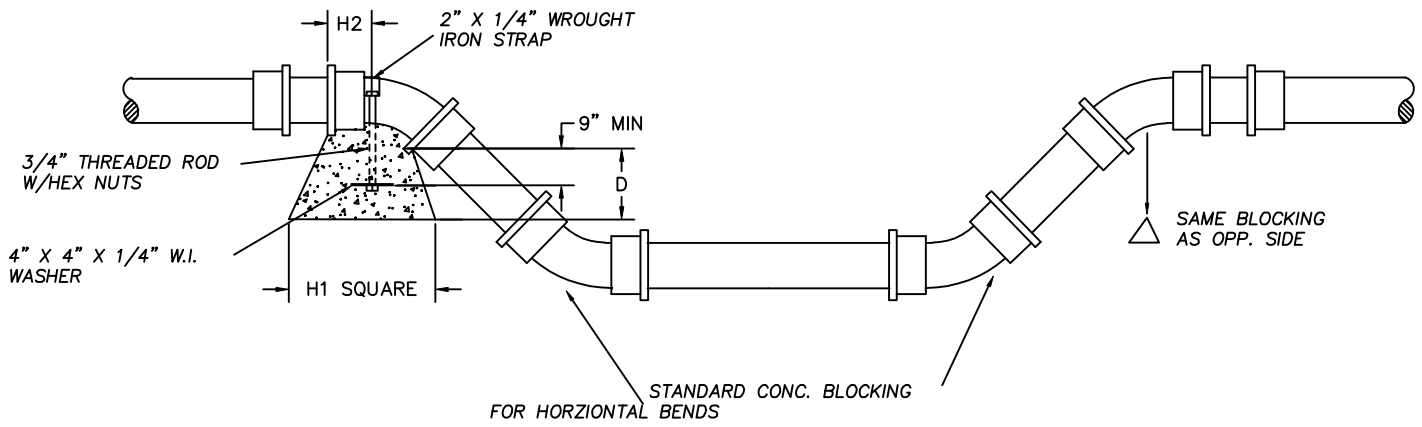

VERTICAL BENDS

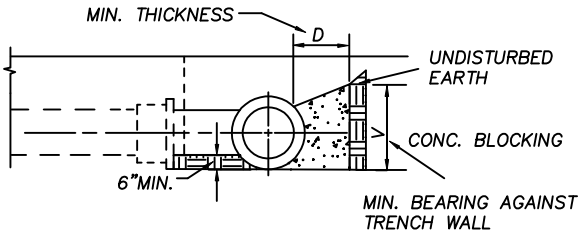

SECTION

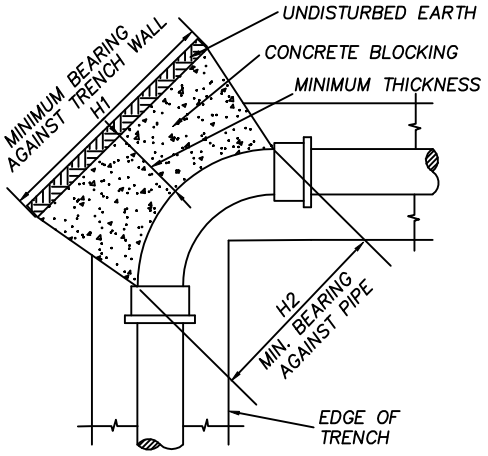

HORIZONTAL BENDS

TABLE OF DIMENSIONS FOR CONCRETE BLOCKING

SIZE	TEES, CROSSES & PLUGS					90° BENDS					45° BENDS					22 1/2° BENDS					11 1/4° BENDS					SIZE
PIPE	H1	H2	V	D	CU. FT.	H1	H2	V	D	CU. FT.	H1	H2	V	D	CU. FT.	H1	H2	V	D	CU. FT.	H1	H2	V	D	CU. FT.	PIPE
2"& 2 1/4"	18"	10"	12"	18"	1.90	18"	10"	12"	18"	1.90	18"	6"	12"	18"	1.50	18"	6"	12"	18"	1.50	18"	6"	12"	18"	1.50	2"& 2 1/4"
3"& 4"	24"	12"	12"	18"	2.25	24"	12"	12"	18"	2.25	18"	8"	12"	18"	1.60	18"	8"	12"	18"	1.60	18"	8"	12"	18"	1.60	3"& 4"
6"	24"	16"	18"	18"	3.50	30"	16"	18"	18"	4.05	24"	10"	16"	18"	3.20	24"	10"	16"	18"	3.20	24"	10"	16"	18"	3.20	6"
8"	36"	18"	18"	18"	5.05	39"	18"	24"	18"	7.30	30"	11"	18"	18"	3.95	24"	11"	18"	18"	3.45	24"	11"	16"	18"	3.40	8"
10"	48"	24"	18"	24"	7.15	54"	32"	24"	18"	10.25	24"	18"	21"	18"	4.60	24"	18"	21"	18"	4.60	24"	18"	21"	18"	4.60	10"
12"	54"	30"	24"	24"	13.4	54"	32"	36"	24"	18.15	42"	18"	24"	24"	9.60	24"	18"	24"	24"	6.60	24"	18"	21"	24"	6.10	12"
14"	60"	32"	30"	24"	17.9	60"	40"	42"	24"	25.0	44"	24"	30"	24"	13.2	30"	24"	24"	24"	9.2	27"	21"	24"	24"	7.90	14"
16"	66"	34"	36"	24"	22.5	69"	48"	48"	24"	29.0	48"	30"	36"	24"	17.0	36"	30"	27"	24"	11.8	27"	24"	27"	24"	9.10	16"
18"	72"	36"	40"	24"	30.0	72"	48"	60"	24"	38.0	48"	30"	42"	24"	21.0	42"	30"	30"	24"	15.0	30"	30"	36"	24"	13.0	18"
20"	84"	38"	42"	24"	36.0	84"	48"	66"	24"	48.0	54"	40"	46"	24"	27.0	48"	36"	36"	24"	19.0	42"	40"	36"	24"	18.0	20"
24"	108"	42"	48"	24"	45.0	108"	60"	72"	24"	68.0	60"	48"	56"	24"	41.0	54"	42"	42"	24"	25.0	48"	42"	42"	24"	23.0	24"
30"	132"	52"	60"	24"	70.0	132"	72"	92"	24"	104.0	72"	48"	76"	24"	58.0	60"	48"	48"	24"	32.0	54"	48"	54"	24"	32.0	30"
36"	162"	58"	72"	24"	100.0	162"	96"	108"	24"	150.0	84"	72"	84"	24"	85.0	66"	72"	60"	24"	50.0	60"	48"	60"	24"	40.0	36"

DRAWING TITLE	SCALE	DRAWING NO.	REV.
CONCRETE THRUST BLOCKING FOR FORCE MAIN LINES	N.T.S.	A2.16	

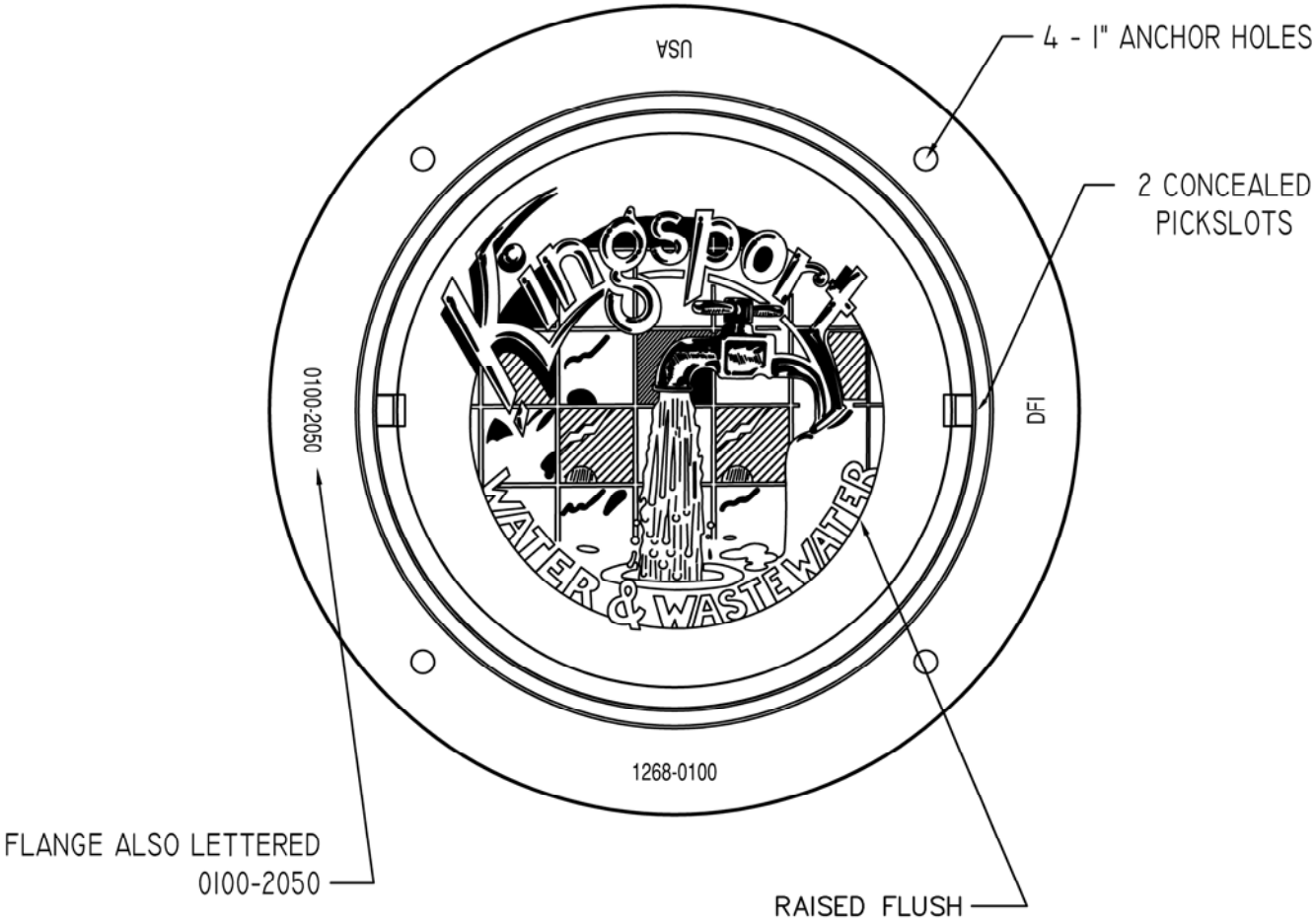

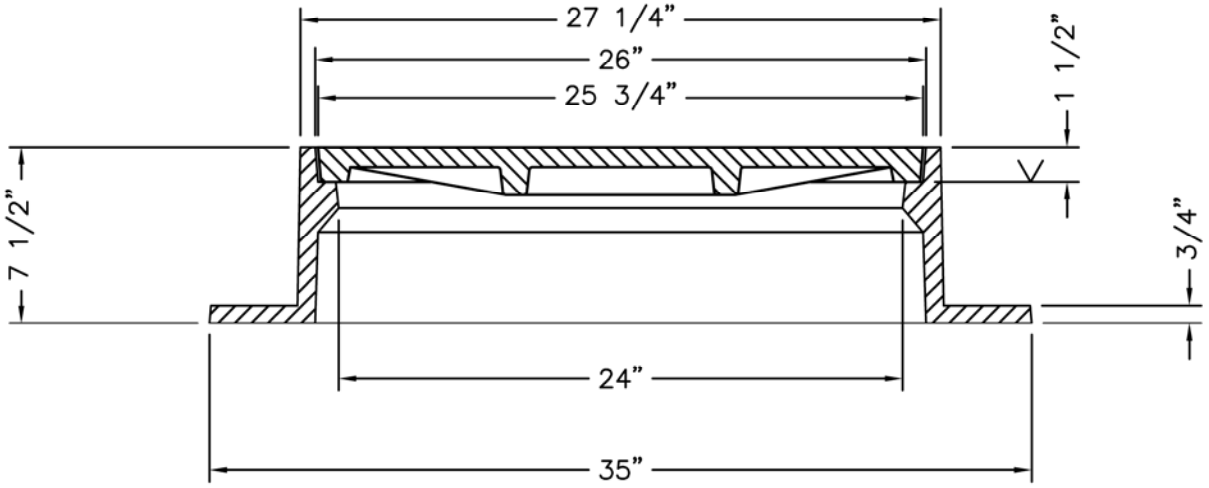

#1268-2115
#1268-0100

MADE IN THE USA
CLASS 35B GRAY IRON
MACHINED BEARING SURFACES
HEAVY DUTY, H20 LOAD RATED

John Bouchard & Sons Co.

1024 Harrison Street, Nashville, TN 37203
Tel: 615-256-0112 Fax: 615-327-2427
WWW.JBOUCHARD.COM EMAIL: FOUNDRY@JBOUCHARD.COM

#1268 FRAME & COVER

DRAWING TITLE	SCALE	DRAWING NO.	REV.
Typical Type "A" C.I. Manhole Frame & Cover	N.T.S.	A2.17	

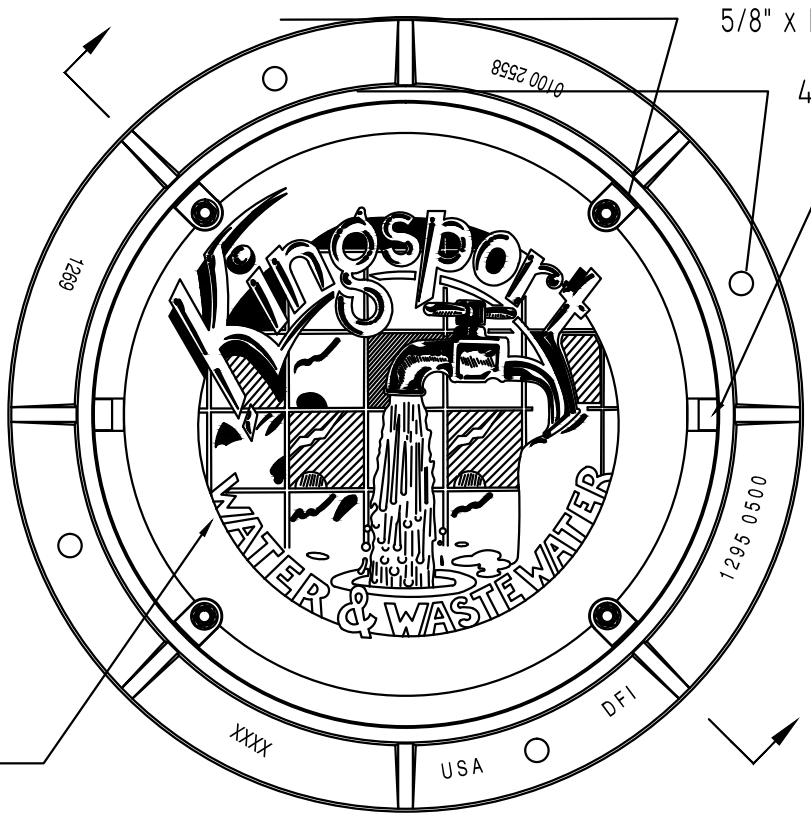

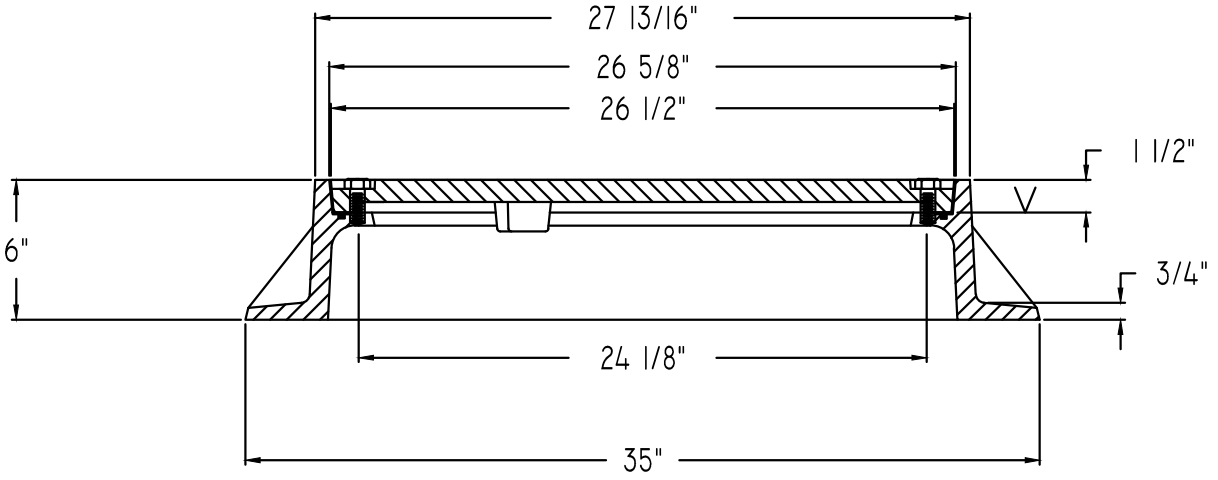

MADE IN THE USA
WATERTIGHT DESIGN AVAILABLE
CLASS 35B GRAY IRON
MACHINED BEARING SURFACES
HEAVY DUTY, H20 LOAD RATED

John Bouchard & Sons Co.

1024 Harrison Street, Nashville, TN 37203
Tel: 615-256-0112 Fax: 615-327-2427
WWW.JBOUCHARD.COM EMAIL: FOUNDRY@JBOUCHARD.COM

#1269 FRAME & COVER

DRAWING TITLE	SCALE	DRAWING NO.	REV.
Typical Type "B" C.I. Manhole Frame & Cover	N.T.S.	A2.18	

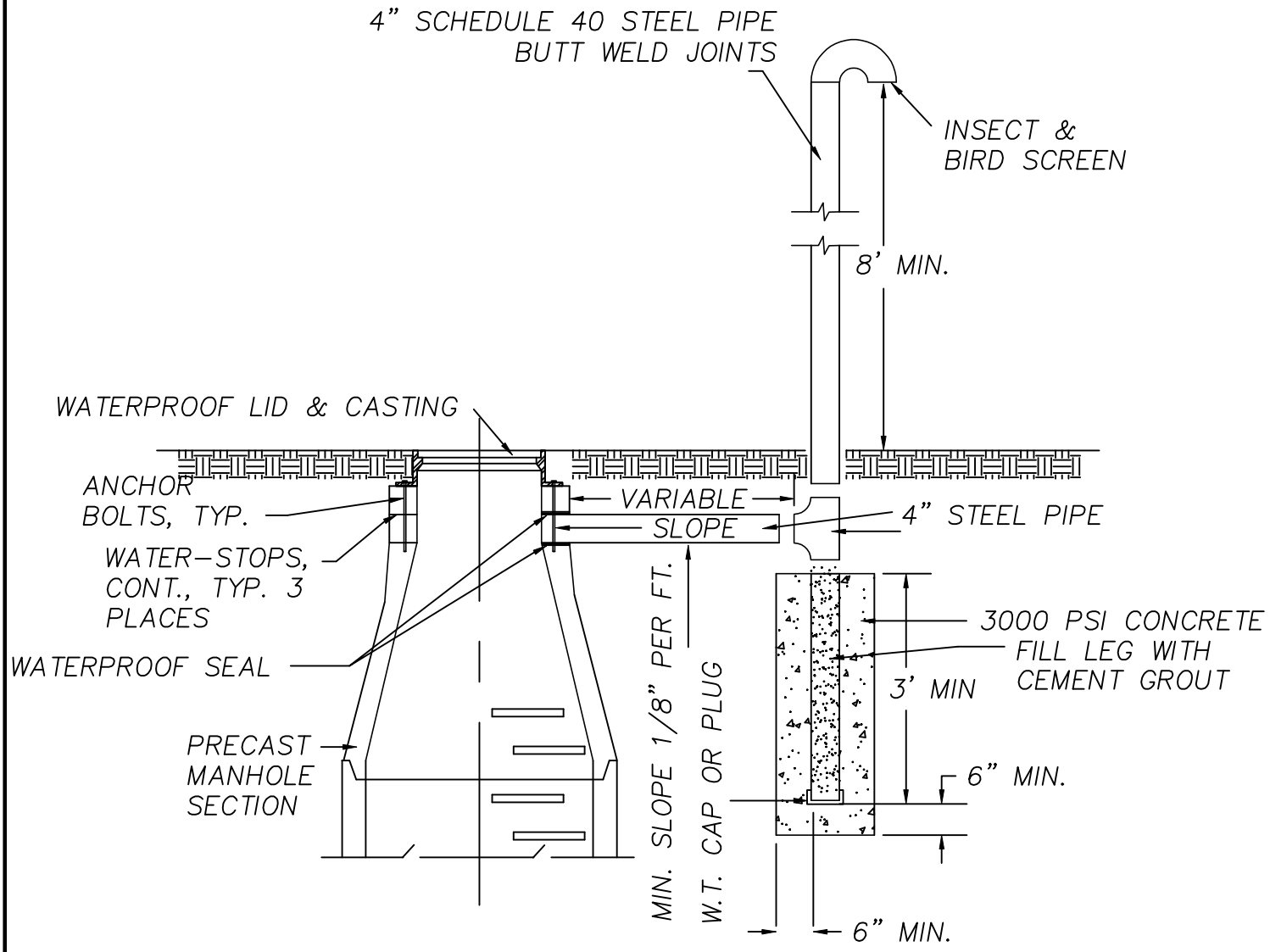

NOTES:

1. LOCATE 4" VENT POPE OUT OF TRAVELWAYS IN BACK OF CURB OR SIDEWALK OR AS CALLED FOR ON PLANS. PIPE TO BE PAINTED WITH ONE COAT OF PRIMER AND TWO COATS OF DARK GREEN ENAMEL.
2. TOP OF VENT TO BE MIN OF 8' ABOVE GRADE OR HIGHER IF SHOWN ON PLANS.

DRAWING TITLE	SCALE	DRAWING NO.	REV.
DETAIL OF VENT FOR WATERTIGHT MANHOLE	N.T.S.	A2.19	

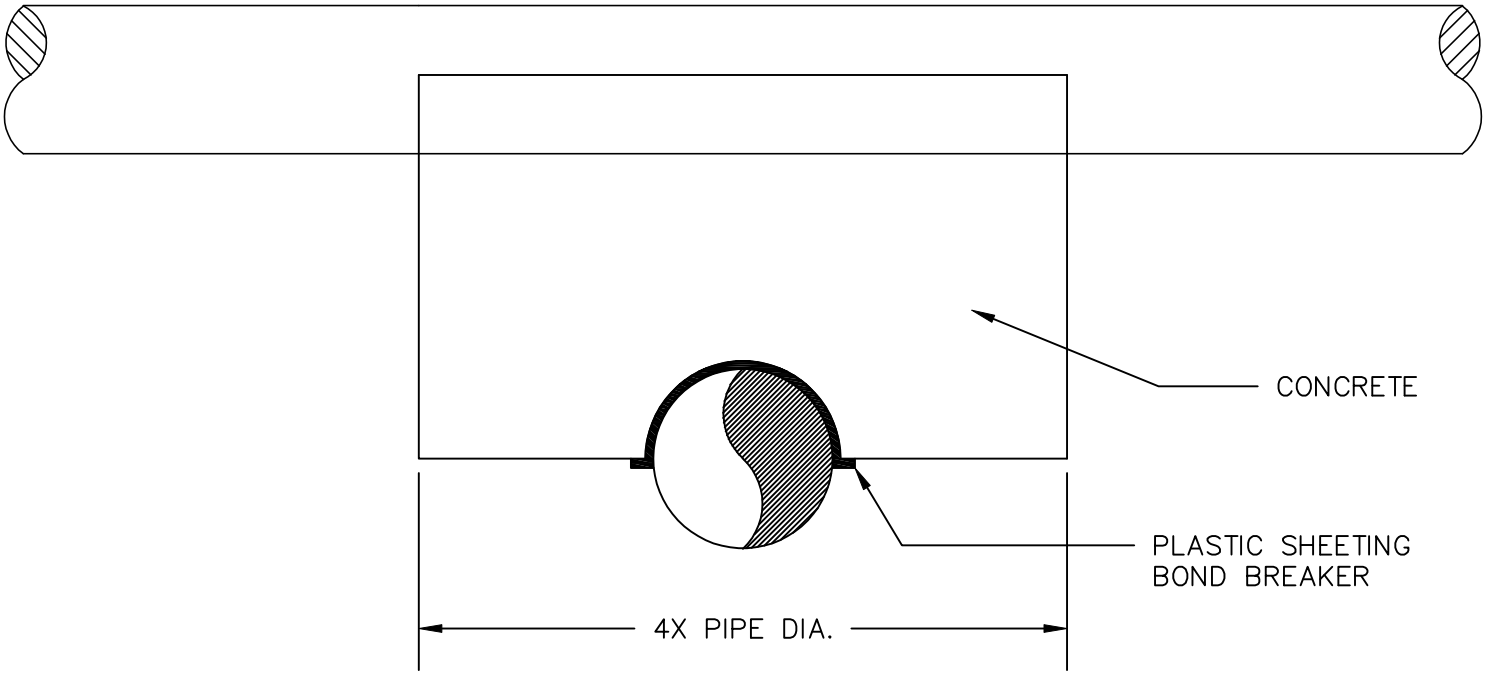

DRAWING TITLE	SCALE	DRAWING NO.	REV.
CROSSING PIPE CRADLE	N.T.S.	A3.1	

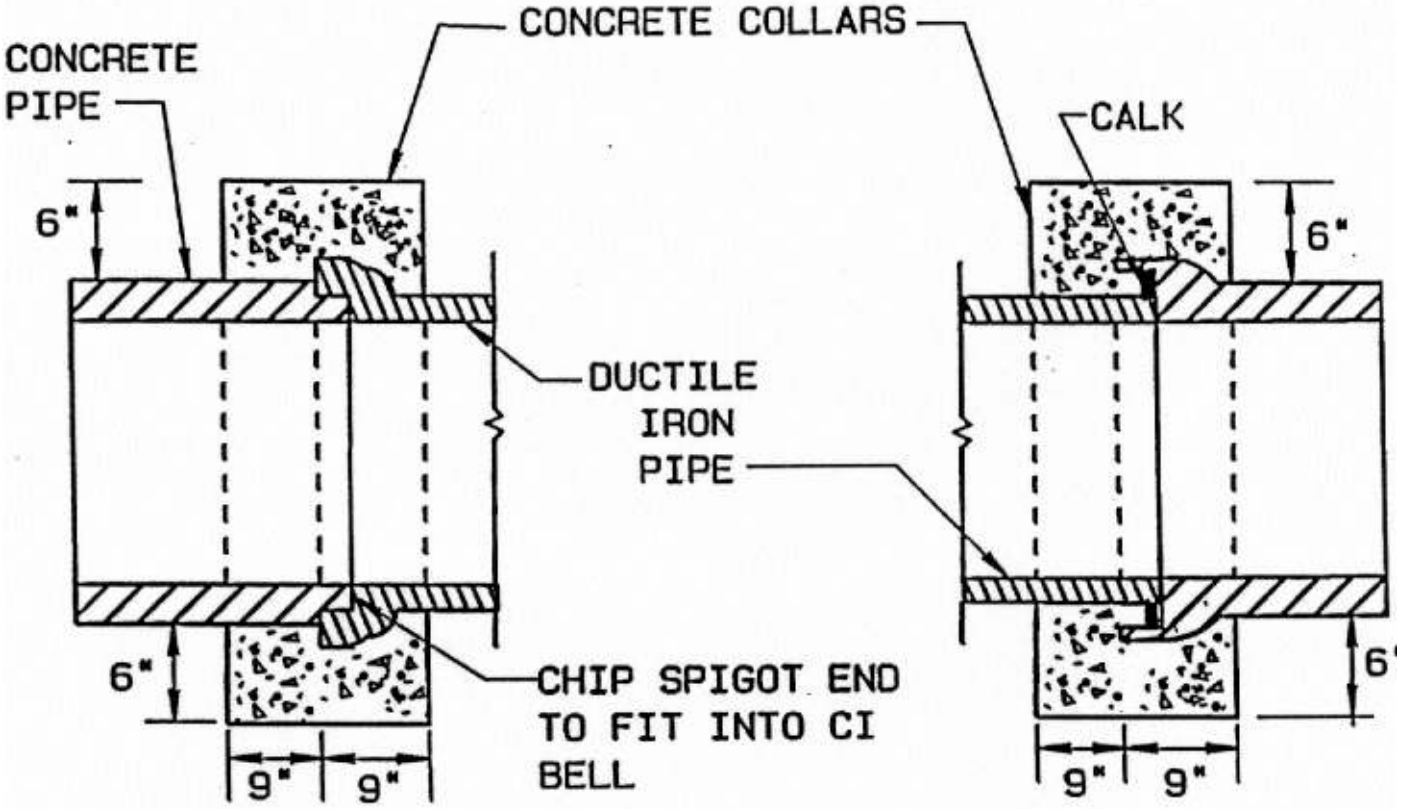

NOTE: A STANDARD MANUFACTURED ADAPTER FITTING MAY BE USED IN LIEU OF THE CONCRETE COLLAR; SUBMIT SHOP DRAWING FOR APPROVAL PRIOR TO USE

DRAWING TITLE	SCALE	DRAWING NO.	REV.
CONCRETE PIPE TO CAST IRON ADAPTER	N.T.S.	A3.2	

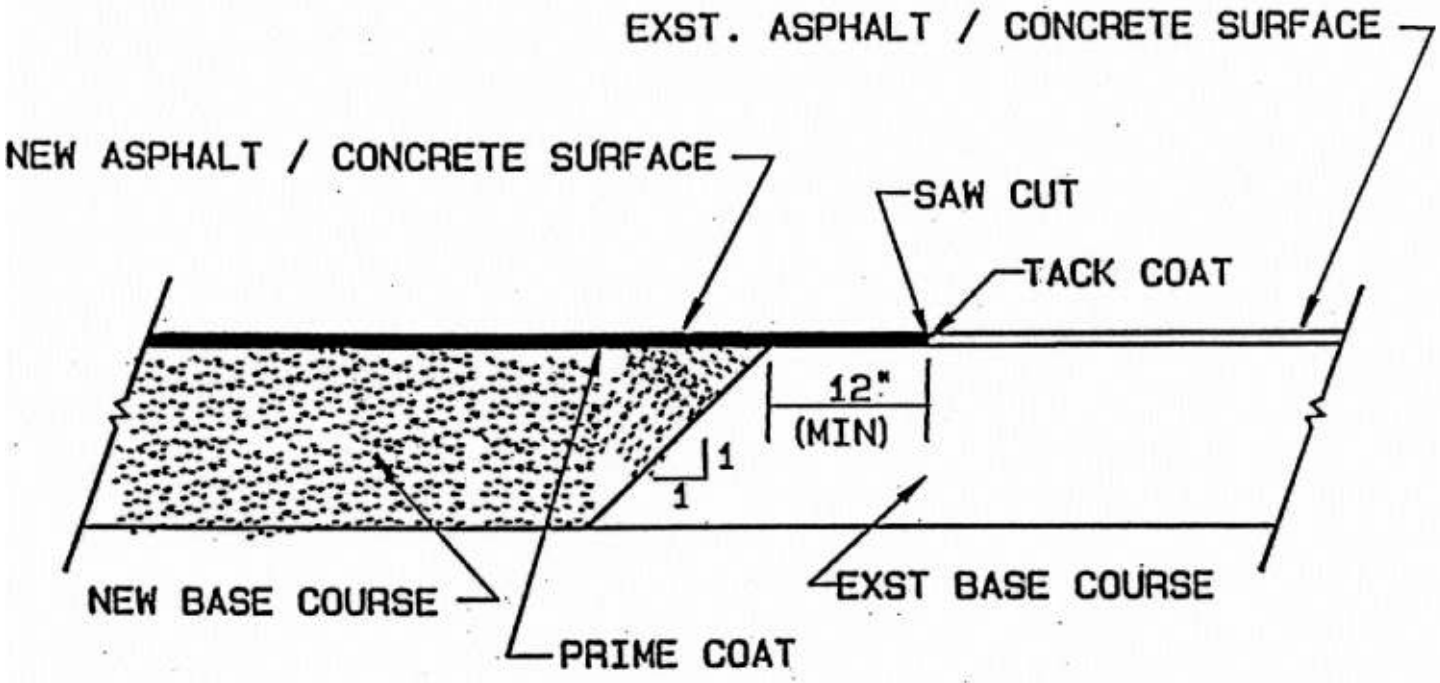

DRAWING TITLE	SCALE	DRAWING NO.	REV.
PAVEMENT TRANSITION DETAIL	N.T.S.	A3.3	

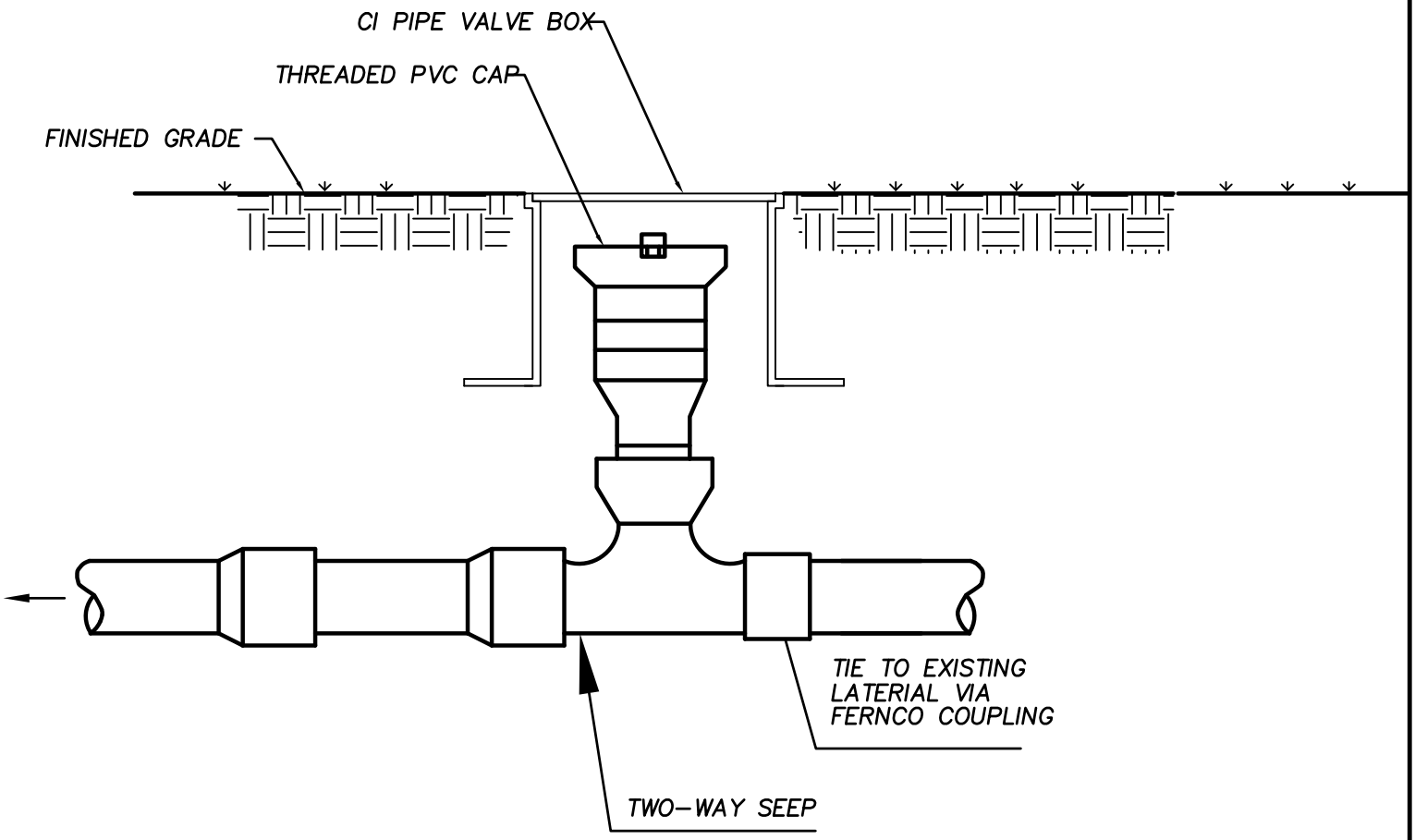

PIPE SIZE AND MATERIAL AS INDICATED ON PLANS OR SPECIFIED

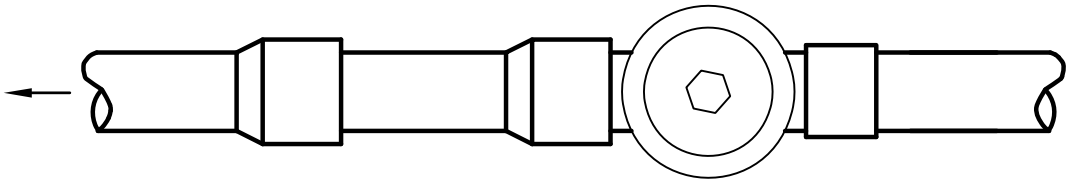

NOTE: TRANSITION FROM EXISTING 4" SERVICE LINE TO 6" SHALL BE MADE WITH ECCENTRIC REDUCER AND SHALL PROVIDE SMOOTH INVERT.

DRAWING TITLE	SCALE	DRAWING NO.	REV.
STANDARD CLEANOUT DETAIL	N.T.S.	A3.4	1

1. DIMENSION A SHALL BE 12" WHEN TRENCH IS 10 FEET OR LESS DEEP FROM INVERT OF PIPE, AND 18" WHEN THE TRENCH IS GREATER THAN 10' DEEP.
2. DIMENSION B SHALL BE 12" WHEN TRENCH IS 10 FEET OR LESS DEEP FROM INVERT OF PIPE, AND 24" WHEN THE TRENCH IS GREATER THAN 10 FEET DEEP.
3. SEE STANDARD TRENCH DETAIL FOR BACKFILL AND BEDDING REQUIREMENTS AND OTHER PERTINENT INFORMATION.
4. ROCK MEASURED FOR PAYMENT SHALL BE THAT ACTUALLY REMOVED, EXCEPT THE MEASURED WIDTH SHALL NOT EXCEED THE MAXIMUM WIDTH INDICATED BELOW.
5. PAVEMENT MEASURED FOR PAYMENT SHALL BE THAT ACTUALLY REPLACED, EXCEPT THE MEASURED WIDTH SHALL NOT EXCEED THE MAXIMUM WIDTH INDICATED BELOW.

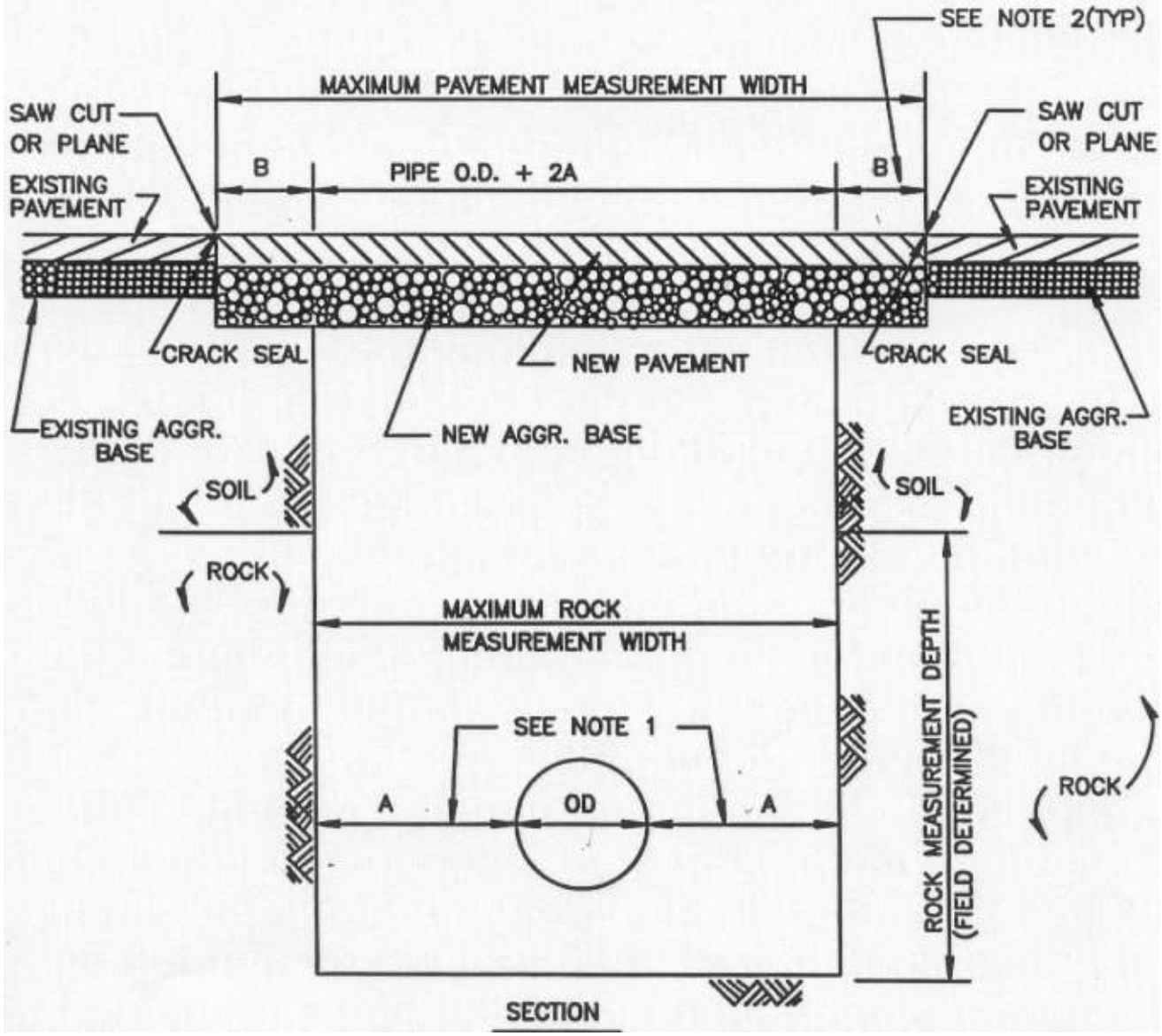

SECTION

DRAWING TITLE	SCALE	DRAWING NO.	REV.
ROCK & PAVEMENT MEASUREMENT	N.T.S.	A3.5	

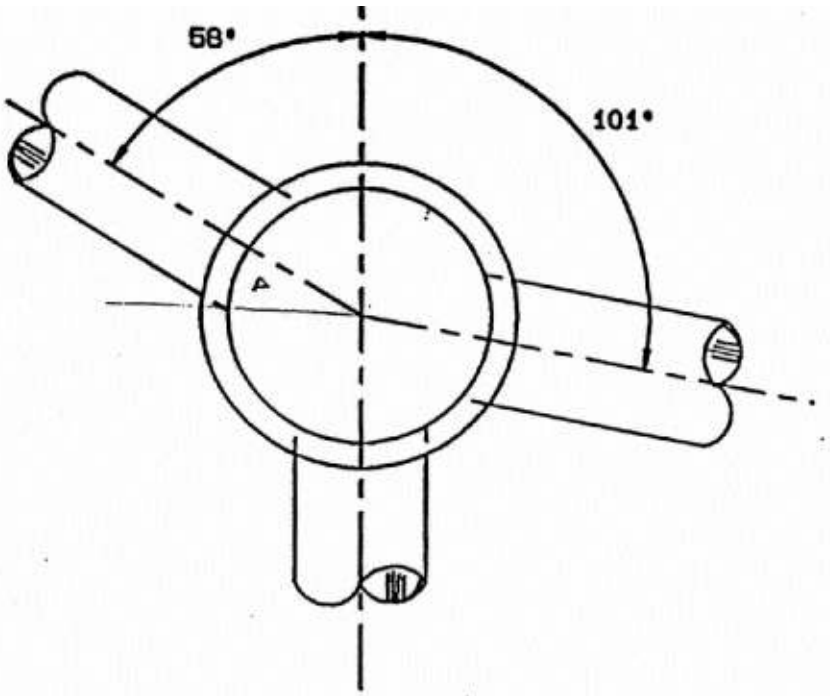

MANHOLE SIZING TABLE					
MAXIMUM Δ'S AT MANHOLE (DEGREES)					
SEWER PIPE SIZE	SIZE OF MANHOLE				
	48"	60"	72"	84"	96"
21"	68°	92°	107°		
24"	58°	85°	101°		
27"	47°	77°	95°		
30"	35°	68°	89°	103°	
36"	USE NEXT SIZE	50°	75°	92°	103°
42"		USE NEXT SIZE	60°	80°	94°
48"			USE NEXT SIZE	67°	84°
54"				USE NEXT SIZE	72°

DRAWING TITLE	SCALE	DRAWING NO.	REV.
MANHOLE SIZING TABLE	N.T.S.	A3.6	

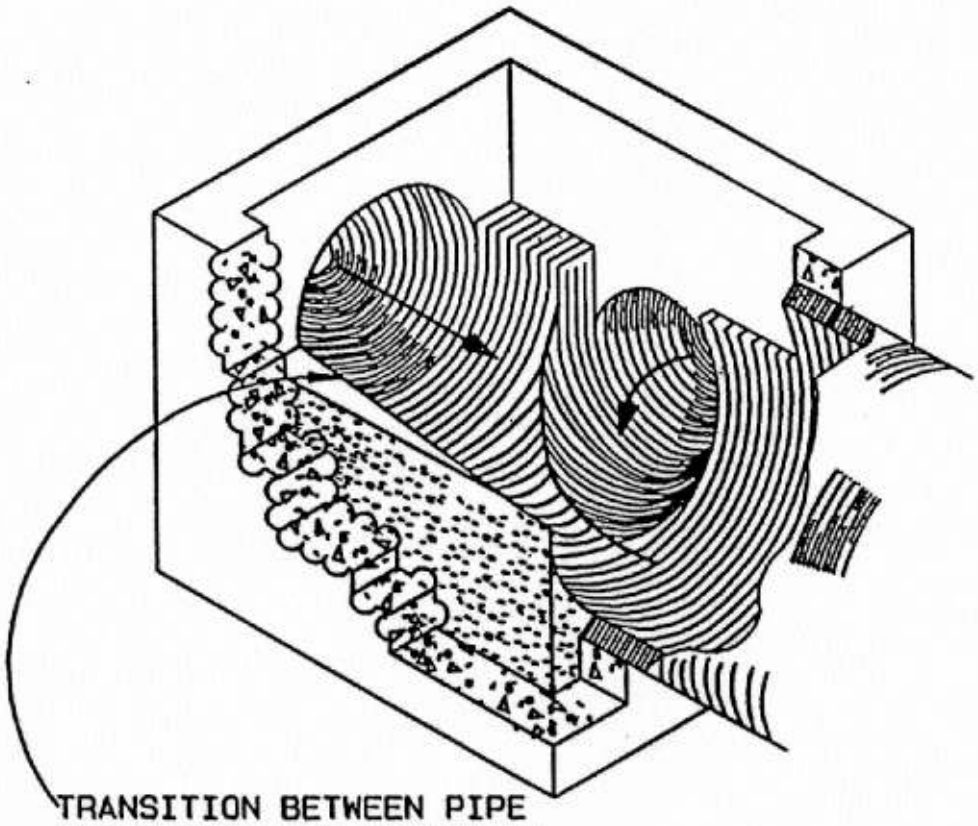

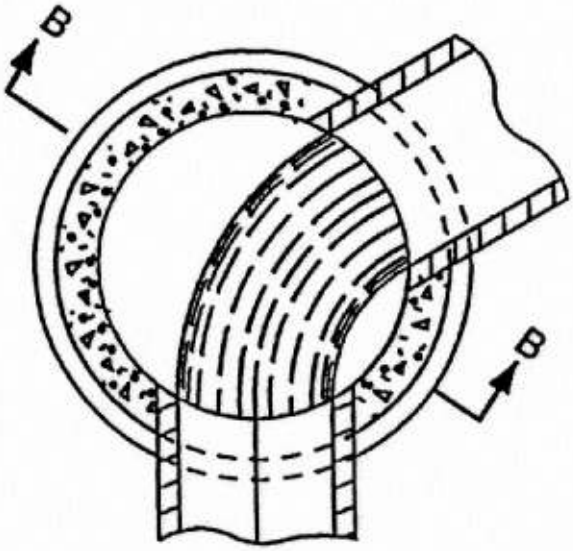

PLAN

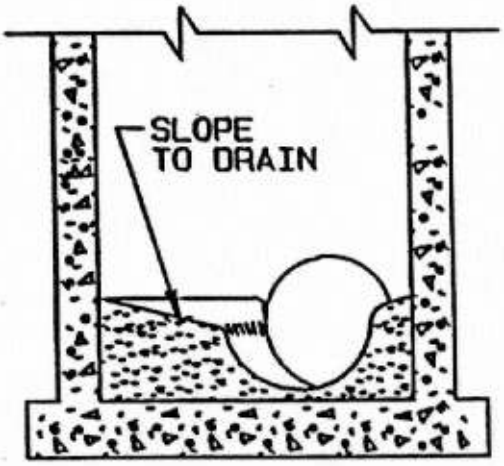

SECTION B-B

METHOD OF TREATMENT IN MANHOLES

DRAWING TITLE	SCALE	DRAWING NO.	REV.
MANHOLE INVERT SHAPING	*N.T.S.*	*A3.7*	

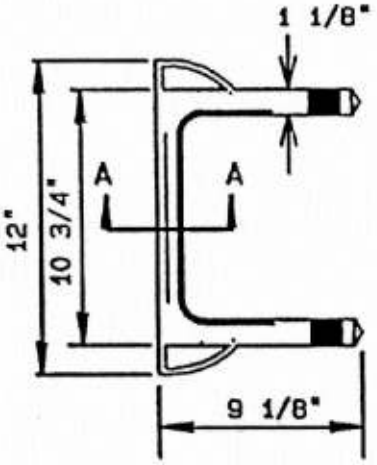

SECTION A-A

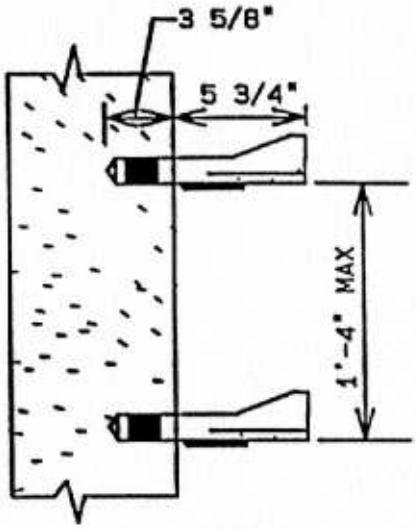

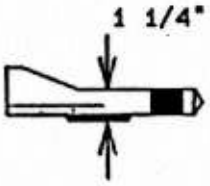

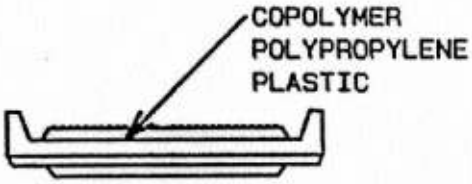

NOTES

STEPS WILL BE REQUIRED IN ALL STRUCTURES WITH A DEPTH OF 4'-0" OR GREATER UNLESS EITHERWISE NOTED ON THE PLANS.

ALL STEPS SHALL PROTRUDE 5" FROM INSIDE FACE OF STRUCTURE WALL.

MAXIMUM STEP SPACING TO BE 1'-4" C-C.

STEPS SHALL WITHSTAND A MINIMUM LOAD OF 300 POUNDS WHEN EXTENDED 5" FROM THE FACE OF THE SUPPORT.

STEPS ARE TO BE VERTICALLY ALIGNED AND UNIFORMILY SPACED FOR THE ENTIRE DEPTH OF ANY STRUCTURE.

IN PRECAST UNITS STEPS MAY BE CAST IN PLACE OR MORTARED INTO HOLES PROVIDED BY THE FABRICATOR.

STEPS OFFERING DIMENSIONS, CONFIGURATIONS, OR MATERIALS FROM THOSE SHOWN MAY ALSO BE USED PROVIDED THEY MEET THE MINIMUM REQUIRMENTS SHOWN HEREON AND THE CONTRACTOR HAS FURNISHED THE ENGINEER WITH DETAILS AND CERTIFIED TEST REPORTS OF THE PROPOSED SUBSTITUTE AND HAS RECIEVED WRITTEN APPROVAL FROM THE ENGINEER FOR THE USE OF SUCH STEPS.

DRAWING TITLE	SCALE	DRAWING NO.	REV.
MANHOLE STEP	N.T.S.	A3.8	

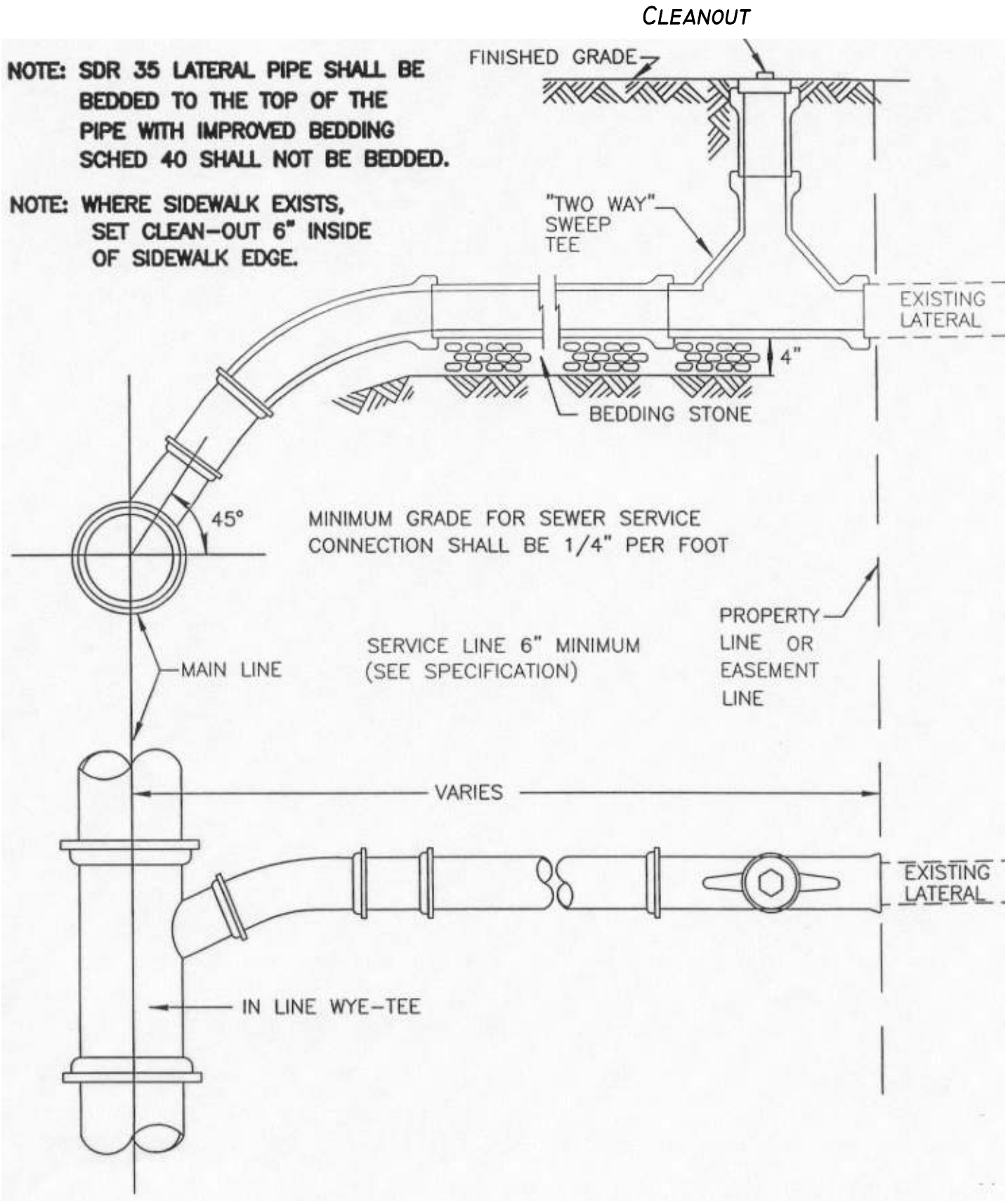

DRAWING TITLE	SCALE	DRAWING NO.	REV.
SEWER LATERAL CONNECTIONS	N.T.S.	A3.9	

NOTE:
SDR 35 LATERAL PIPE SHALL BE BEDDED TO THE TOP OF THE PIPE WITH IMPROVED BEDDING; SCHED 40 SHALL BOT BE BEDDED.

NOTE:
WHERE SIDEWALK EXISTS, SET CLEAN-OUT 6" INSIDE OF SIDEWALK EDGE.

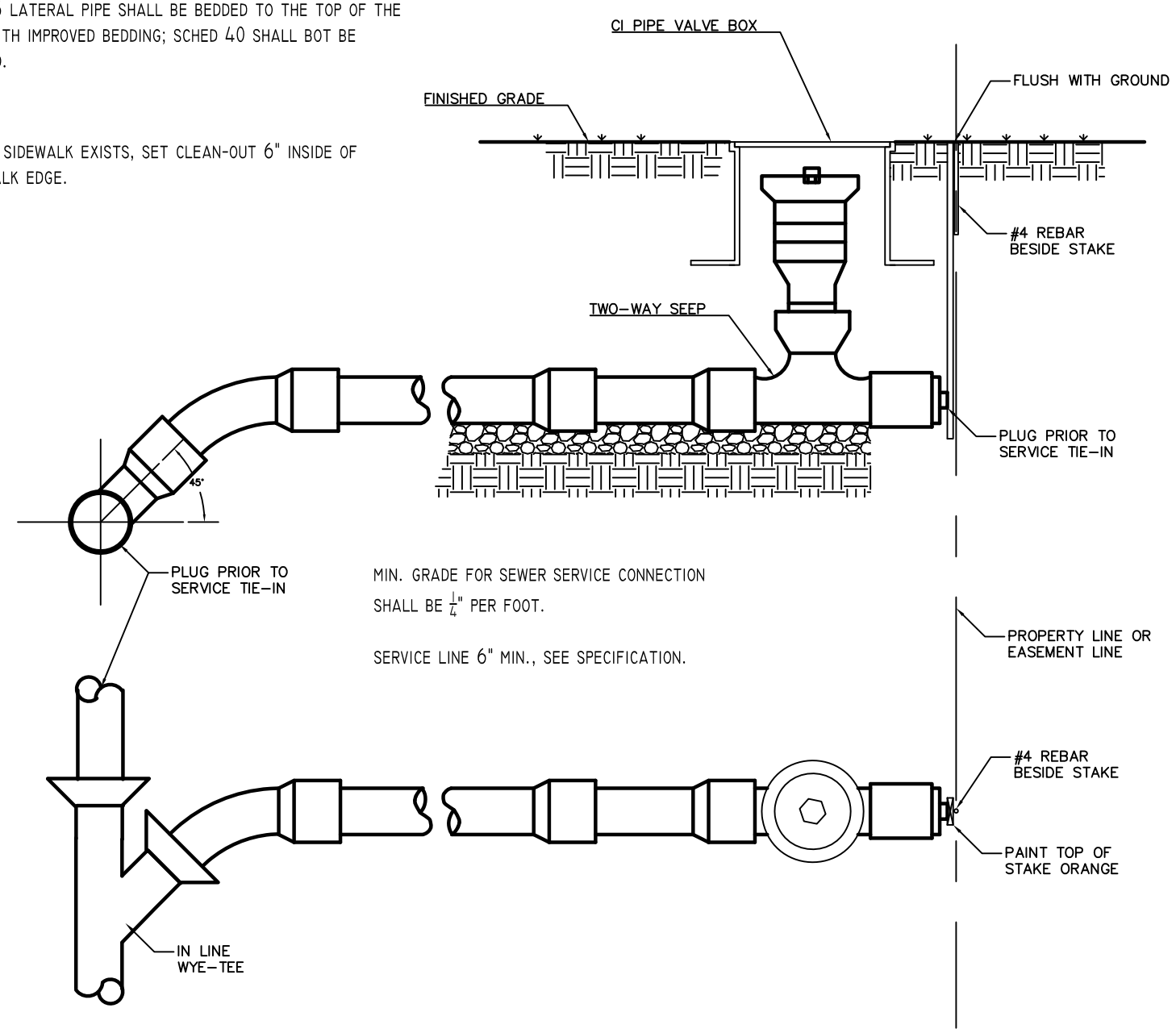

DRAWING TITLE	SCALE	DRAWING NO.	REV.
SEWER LATERAL CONNECTIONS - FUTURE	N.T.S.	A3.10	1

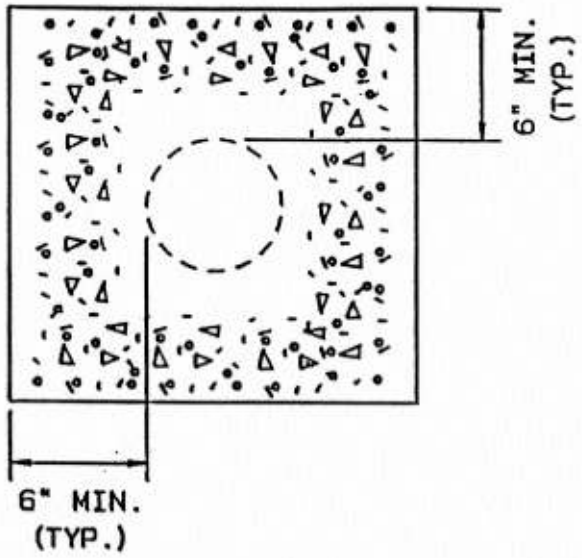

SECTION A-A

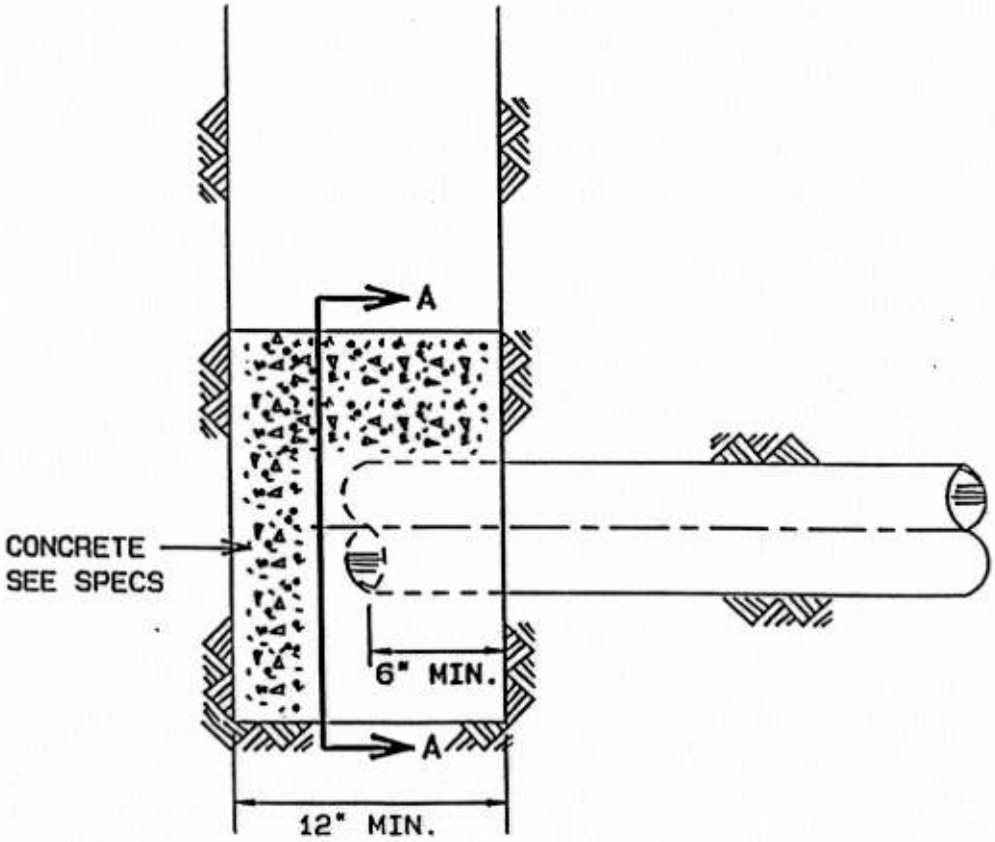

DRAWING TITLE	SCALE	DRAWING NO.	REV.
END PLUGGING ABANDONED SEWER LINE	*N.T.S.*	*A3.11*	

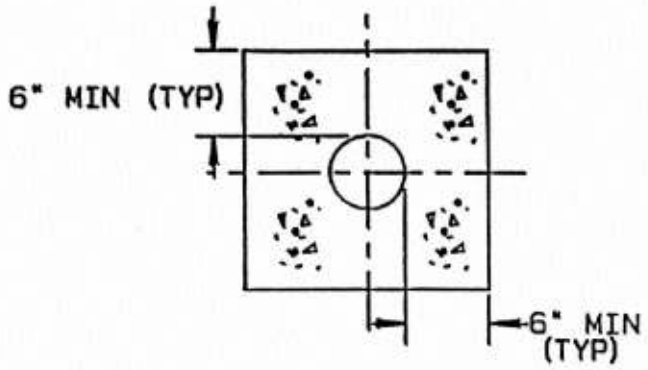

SECTION A-A

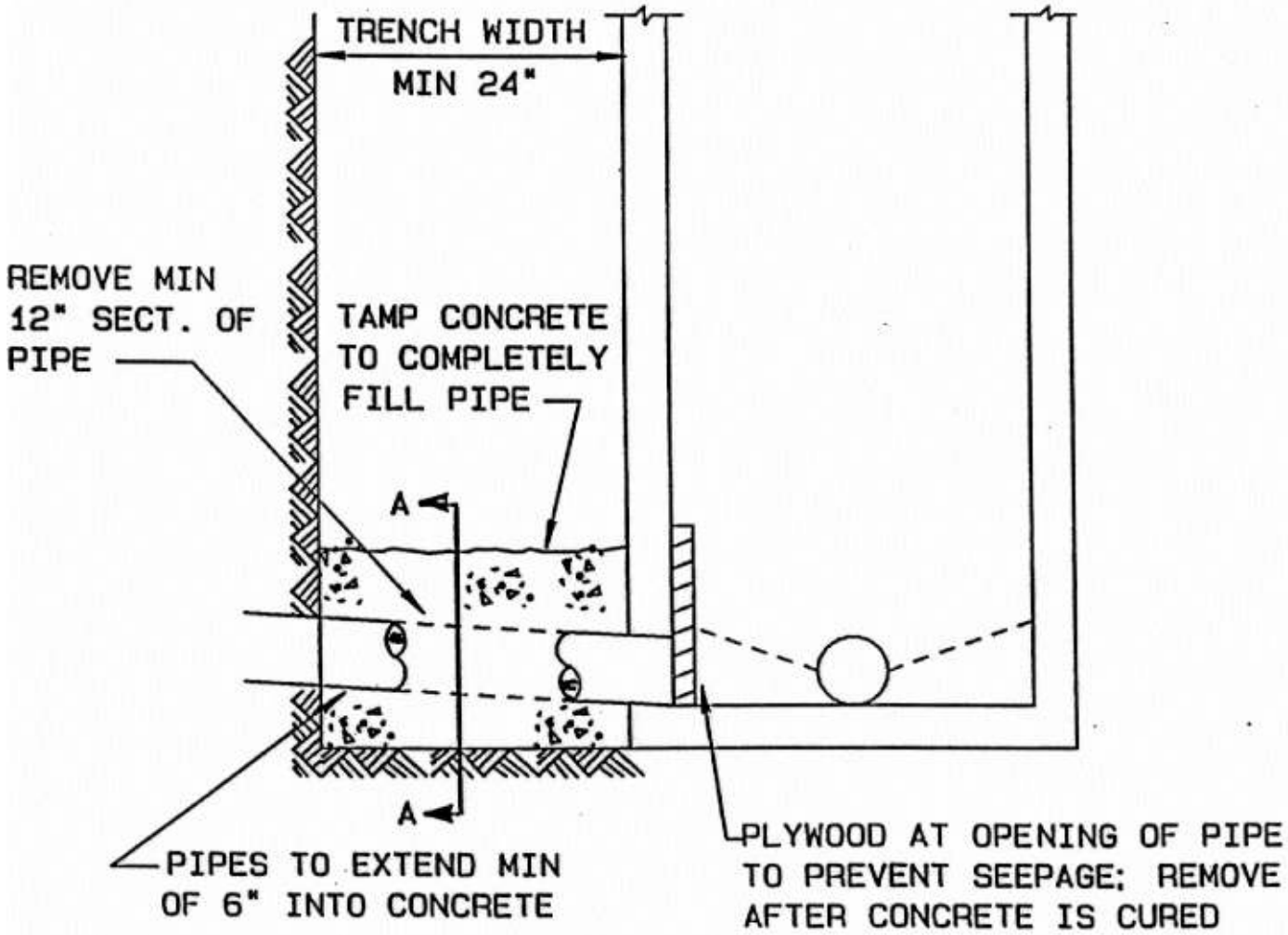

DRAWING TITLE	SCALE	DRAWING NO.	REV.
PLUGGING ABANDONED SEWER LINE AT MANHOLE	*N.T.S.*	*A3.12*	

NOTE: IF SERVICE LATERAL ENTERS MAIN SEWER W/ A STRAIGHT DROP OF 2' OR GREATER. ENCASE MAINLINE AS SHOWN IN THIS DETAIL & BACKFILL DITCH TO 6" BELOW INVERT OF SERVICE LATERAL & PLUG IN ACCORDANCE W/ END PLUG DETAIL.

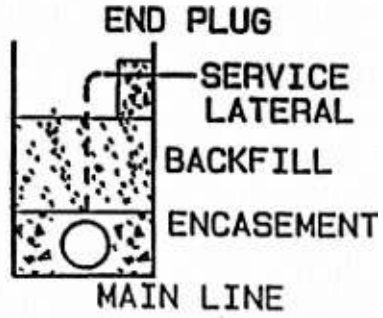

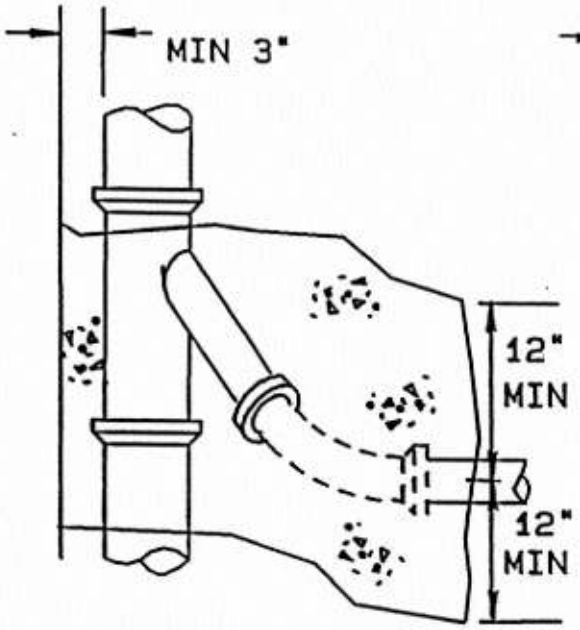

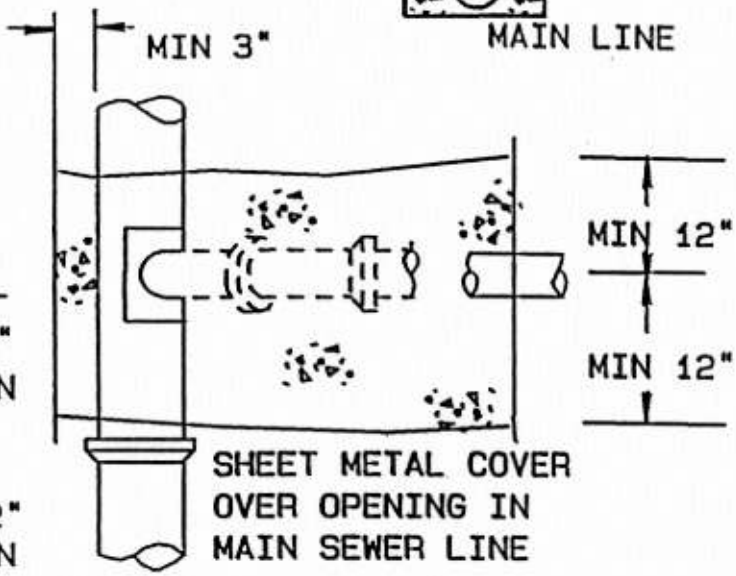

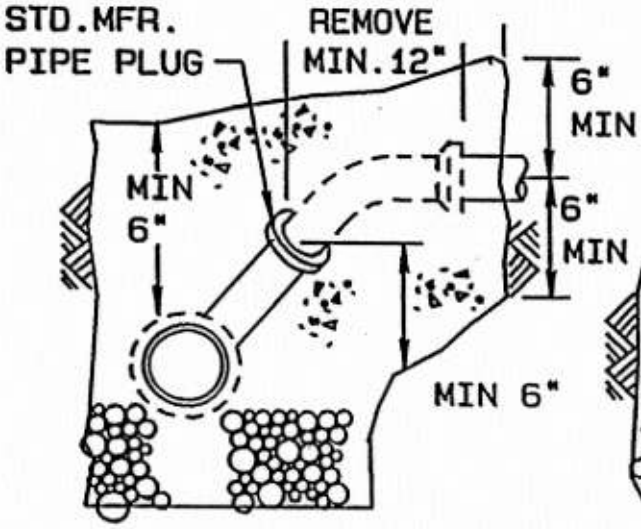

STANDARD TEE OR WYE SERVICE CONNECTION

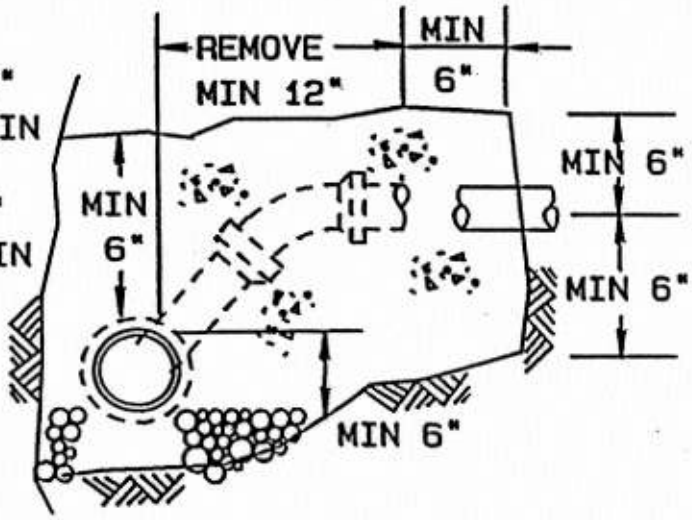

FIELD ADAPTED SERVICE CONNECTION

DRAWING TITLE	SCALE	DRAWING NO.	REV.
PLUGGING ABANDONED SERVICE LATERAL AT MAIN LINE	N.T.S.	A3.13	

CONTAIN ROCK MATERIAL LARGER THAN 6" IN ANY DIMENSION

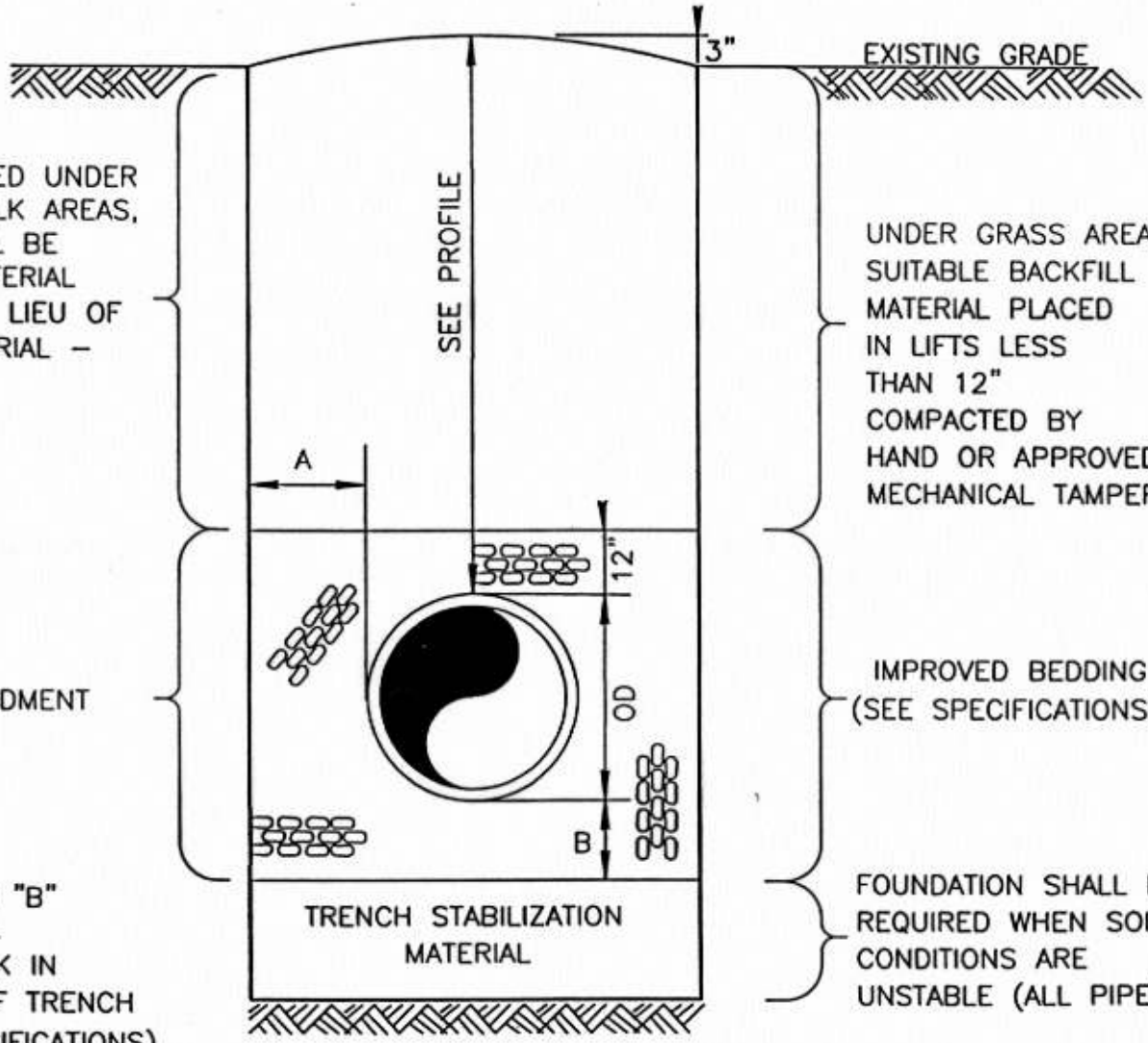

WHERE INDICATED UNDER PAVED AND WALK AREAS, BACKFILL SHALL BE AGGREGATE MATERIAL IN 8" LIFTS IN LIEU OF SUITABLE MATERIAL – SEE SPECS.

UNDER GRASS AREAS SUITABLE BACKFILL MATERIAL PLACED IN LIFTS LESS THAN 12" COMPACTED BY HAND OR APPROVED MECHANICAL TAMPER

EMBEDMENT

IMPROVED BEDDING (SEE SPECIFICATIONS)

DIMENSION "B"
4" TYPICAL
6" IF ROCK IN BOTTOM OF TRENCH
(SEE SPECIFICATIONS)

FOUNDATION SHALL BE REQUIRED WHEN SOIL CONDITIONS ARE UNSTABLE (ALL PIPE)

THE MAXIMUM TRENCH WIDTH (OD + 2A) SHALL BE MEASURED FROM THE PIPE INVERT TO ONE FOOT ABOVE THE TOP OF PIPE.

DIMENSION "A" SHALL BE 12" WHEN TRENCH IS 10 FEET OR LESS DEEP FROM INVERT OF PIPE, AND 18" WHEN THE TRENCH IS GREATER THAN 10 FEET DEEP.

DRAWING TITLE	SCALE	DRAWING NO.	REV.
TRENCH DETAIL FOR GRAVITY PIPES	N.T.S.	A3.14	

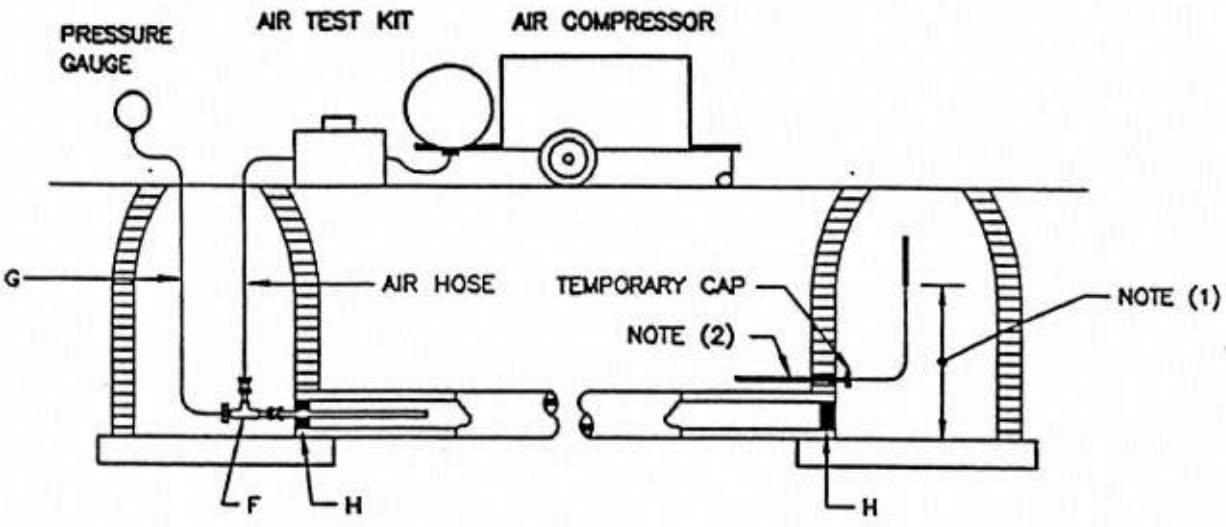

TEST SECTION

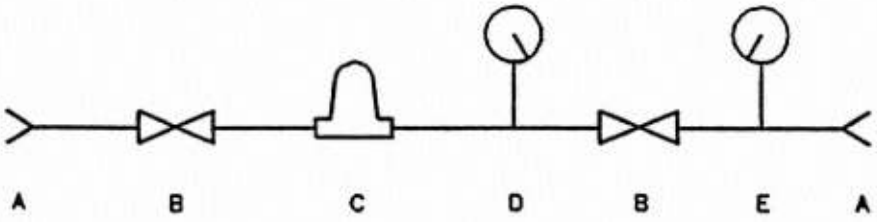

AIR TEST KIT EQUIPMENT

EQUIPMENT SCHEDULE

- A QUICK COUPLING
- B AIR VALVE
- C INPUT AIR PRESSURE REGULATOR
- D INPUT PRESSURE GAUGE
- E PRESSURE SENSOR GAUGE
- F AIR FEED & PRESSURE SENSOR ASSEMBLY
- G PRESSURE SENSOR AIR HOSE
- H STANDARD PLUMBERS PLUGS

NOTES:

(1) CLEAR PLASTIC TUBING– HEIGHT MEASURED FROM PIPE INVERT

(2) 1/2" CAPPED PIPE – 10" LONG INSTALLED WHEN MANHOLE IS INSTALLED

DRAWING TITLE	SCALE	DRAWING NO.	REV.
AIR TEST SKETCH	N.T.S.	A3.15	

SADDLE MODELS

PIPE	MODEL
PVC	MUELER STYLE 508
DUCTILE IRON	SMITH-BLAIR 313 DOUBLE BALE SADDLE
CAST IRON	SAME AS DUCTILE
ASBESTOS CEMENT	SAME AS DUCTILE

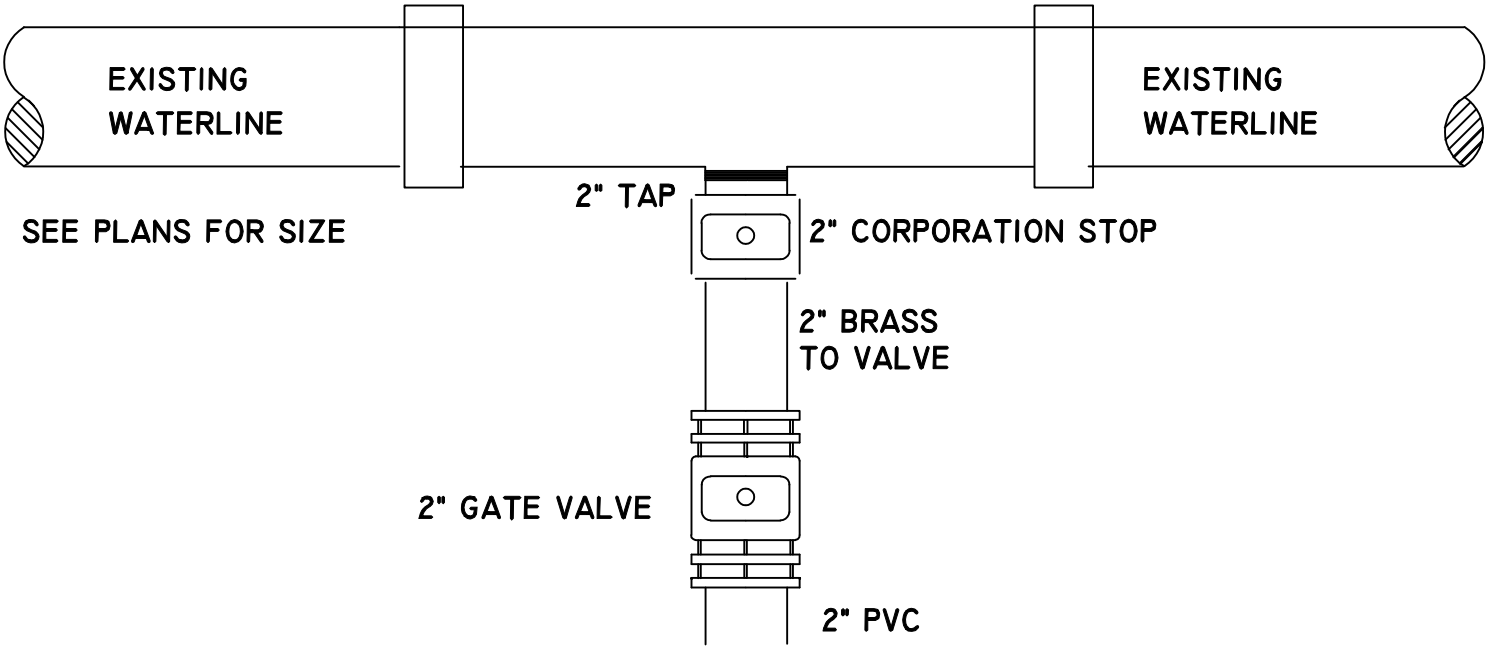

DRAWING TITLE	SCALE	DRAWING NO.	REV.
Typical 2" Wet Tap	*N.T.S.*	*A4.1*	

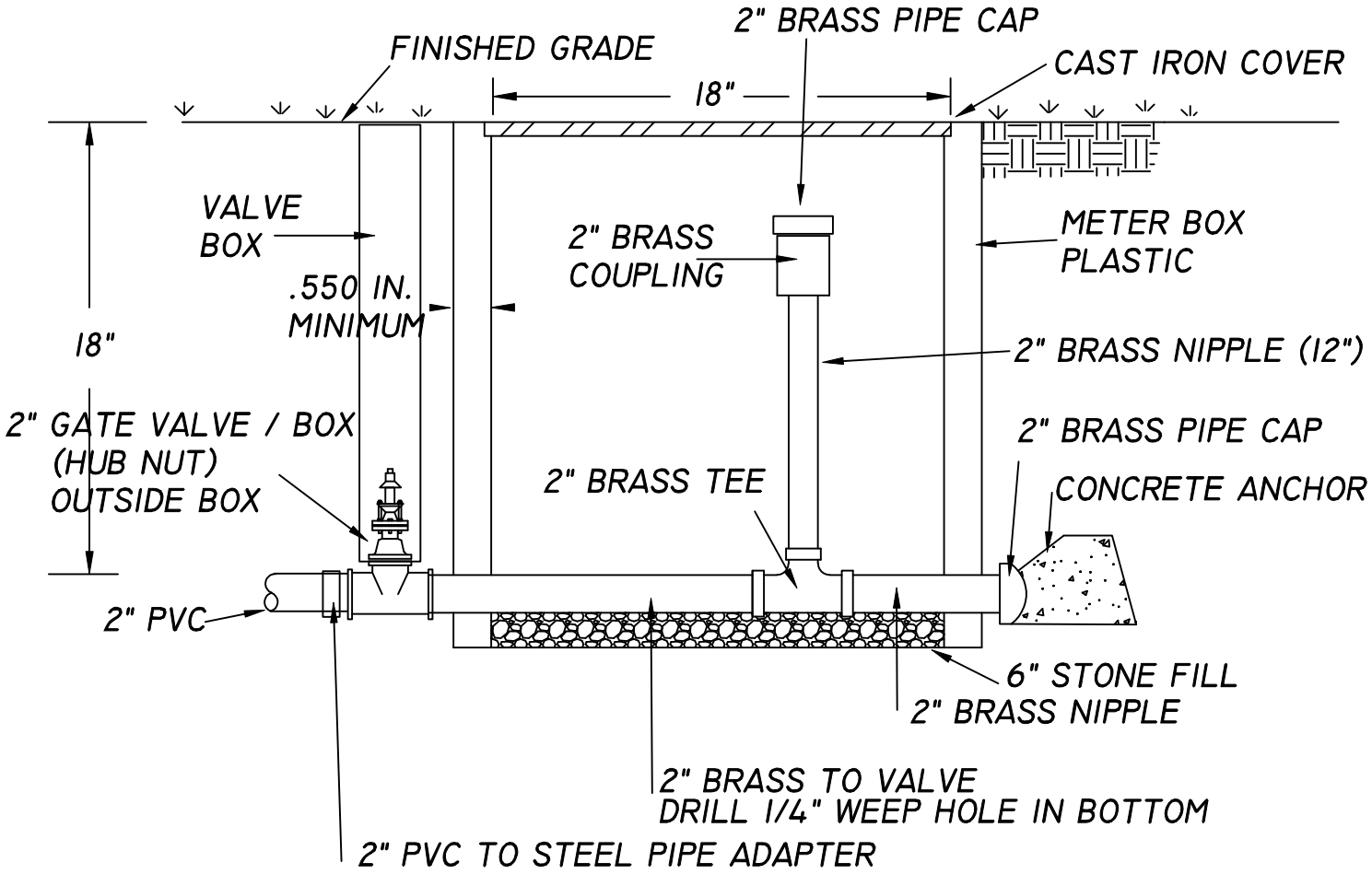

NOTE: ALL PIPING FROM PVC ADAPTER TO BE BRASS PIPE.

DRAWING TITLE	SCALE	DRAWING NO.	REV.
BLOWOFF AT DEAD END WATER MAINS	N.T.S.	A4.2	

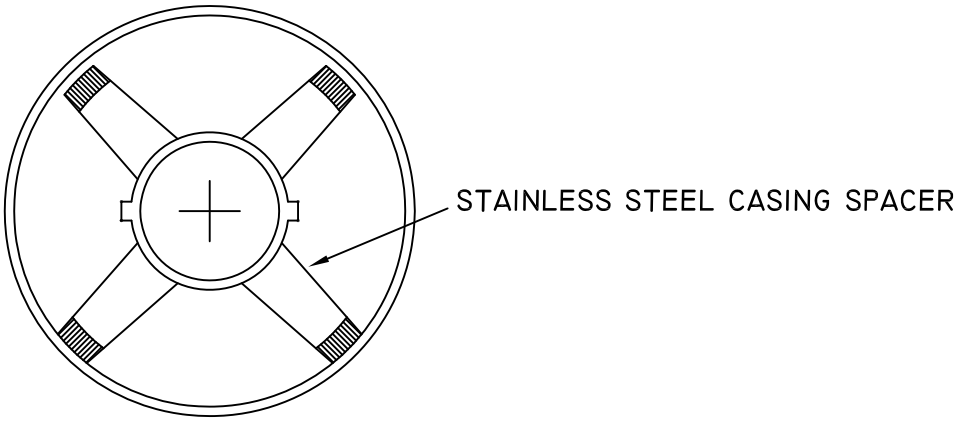

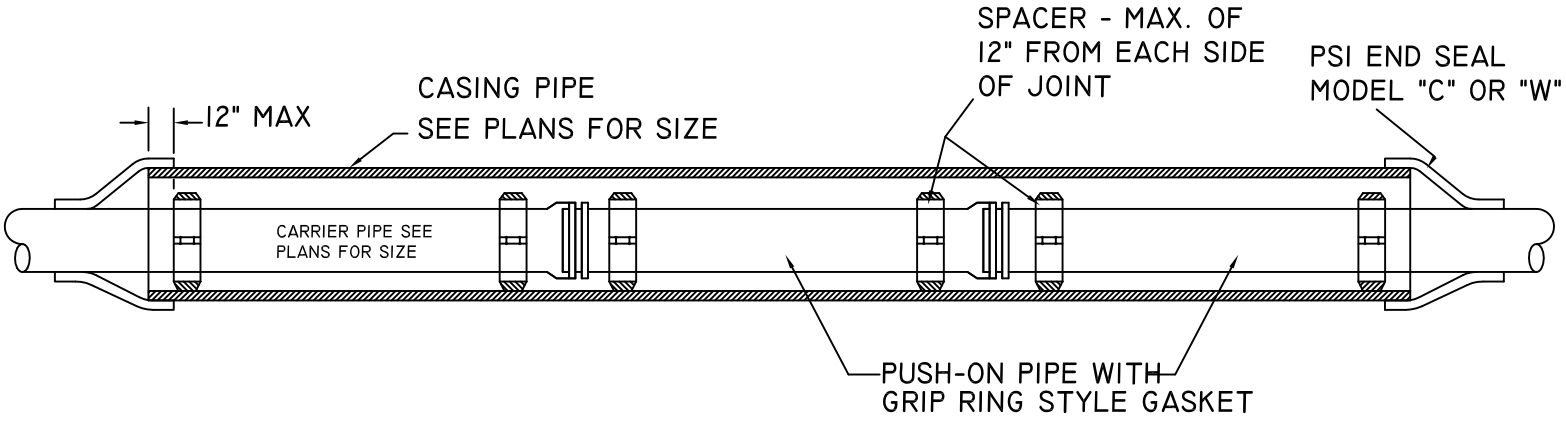

TYPICAL CASING SPACER INSTALLATION

DRAWING TITLE	SCALE	DRAWING NO.	REV.
CASING SPACER FOR CENTERED/RESTRAINED WATERLINE	N.T.S.	A4.3	1

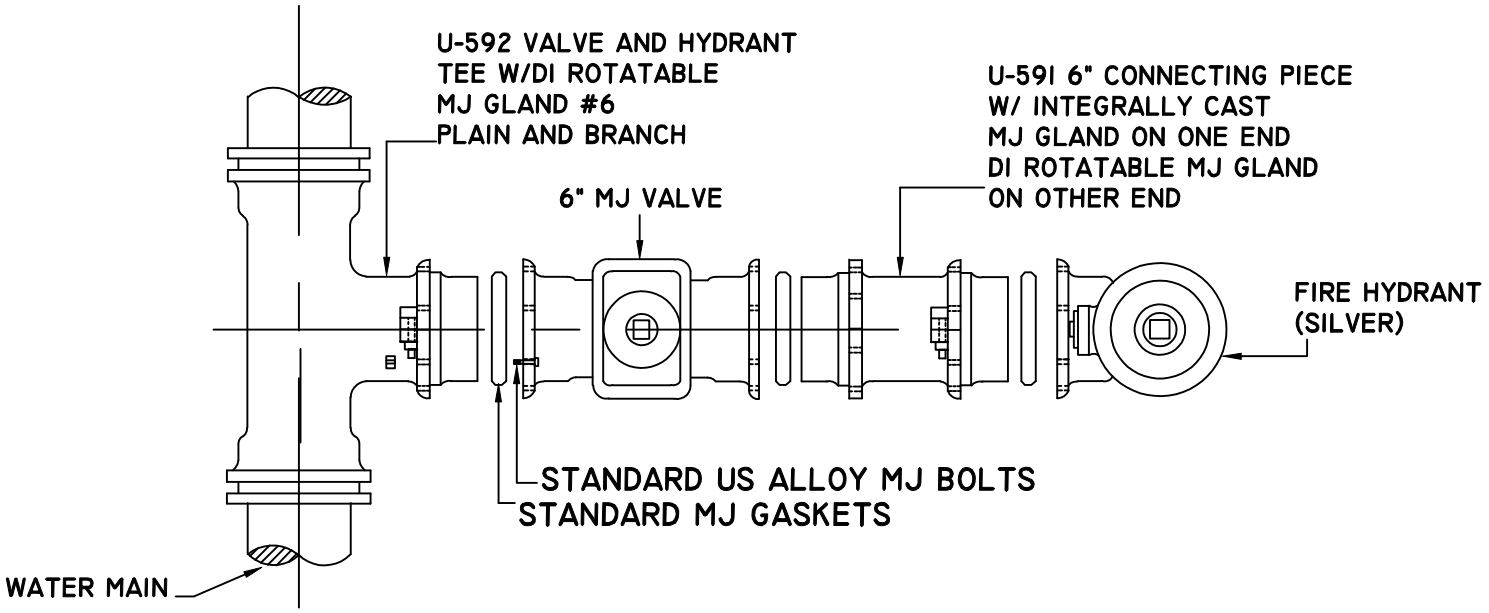

NOTE: ALL NUMBERS EQUAL TO U.S. PIPE & FOUNDRY COMPANY

DRAWING TITLE	SCALE	DRAWING NO.	REV.
Fire Hydrant Detail	*N.T.S.*	*A4.4*	

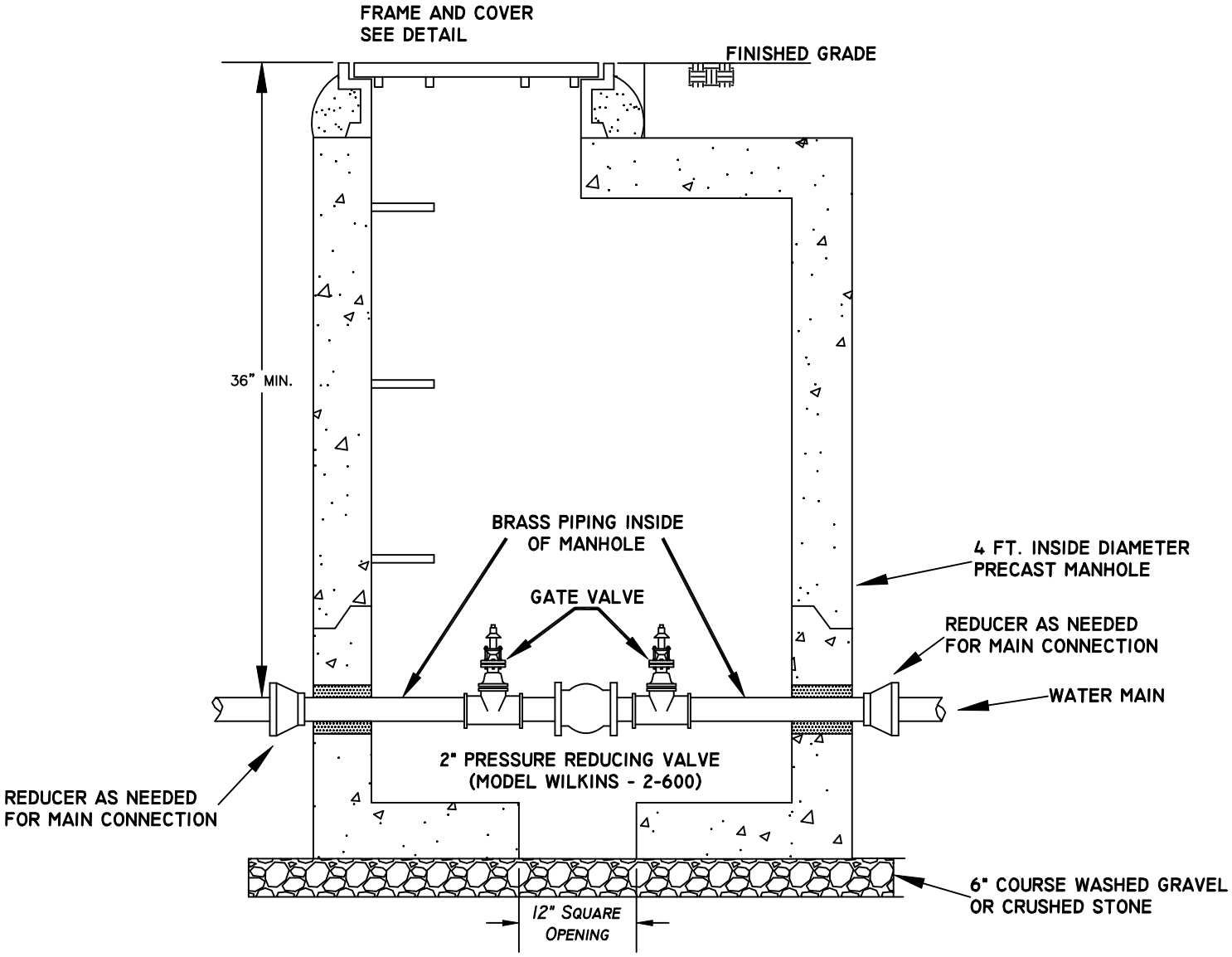

DRAWING TITLE	SCALE	DRAWING NO.	REV.
PRESSURE REDUCING VALVE & VAULT, 2"	N.T.S.	A4.5	

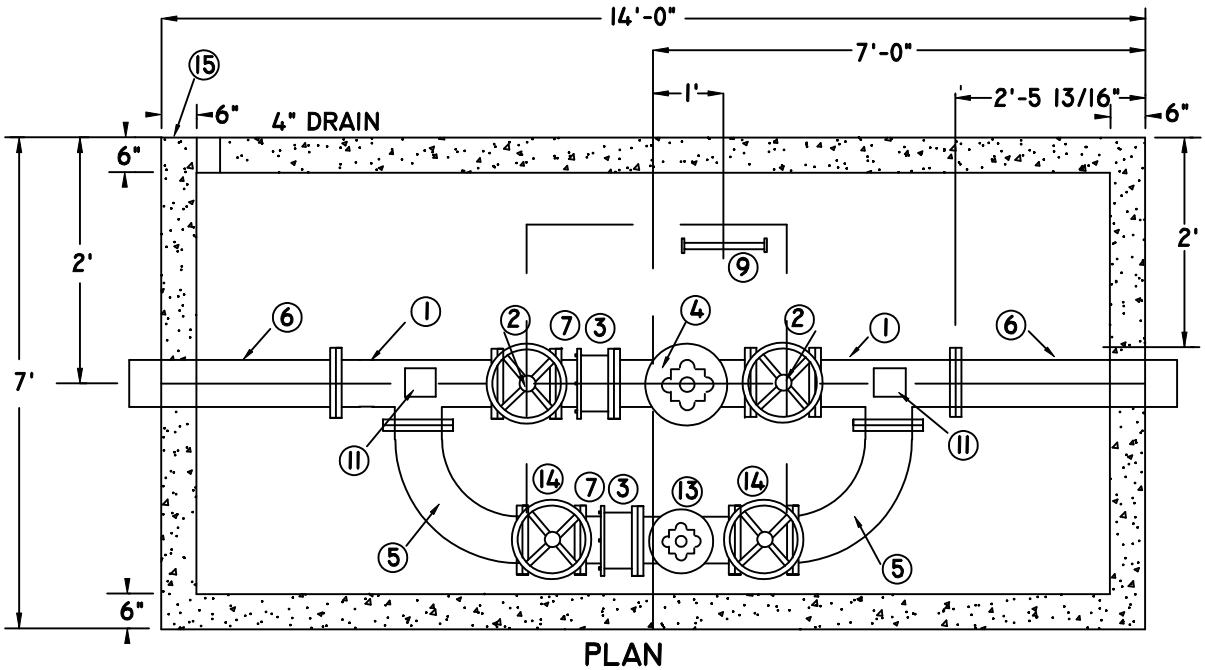

PLAN

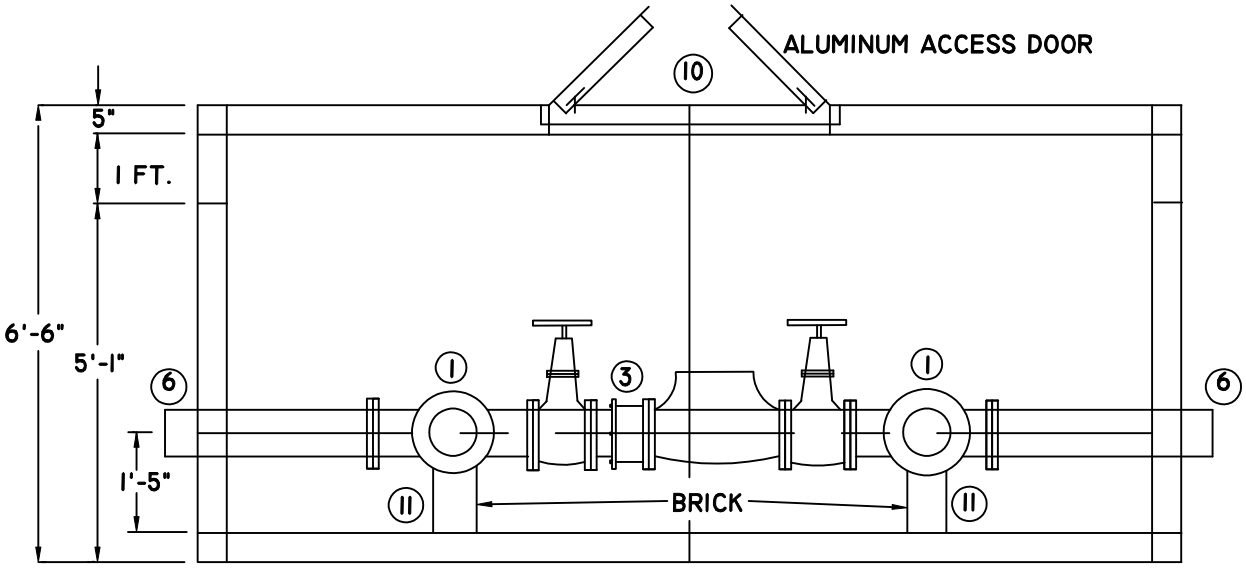

SECTION

BILL OF MATERIAL

ITEM	QTY	DESCRIPTION
1	2	TEE ____" X ____" X ____"
2	2	____ GATE VALVE
3	1	FLANGED ADAPTOR
4	1	PRESSURE REDUCING VALVE (GOLDEN ANDERSON # ___)
5	2	90° LONG BEND RADIUS ELBOW ____" D.I. FLANGED
6	2	PIPE ____" D.I. X 1" - 0" L.G. F/P
7	1	PIPE ____" D.I. X 1" - 0" LG. F/P
8	1	PIPE ____" D.I. X 3" - 2 7/8 LG. F/F
9	1	ALUMINUM LADDER
10	1	48" X 48" ENT. HATCH
11	4	CONCRETE SUPPORT
12		GASKET & BOLT SET
13	1	PRESSURE REDUCING VALVE ____" SIZE GOLDEN ANDERSON # ____
14	2	____" GATE VALVE
15	1	4" DRAIN WITH SCREEN

DRAWING TITLE	SCALE	DRAWING NO.	REV.
PRESSURE REDUCING VALVE & VAULT, 3" AND LARGER	N.T.S.	A4.6	

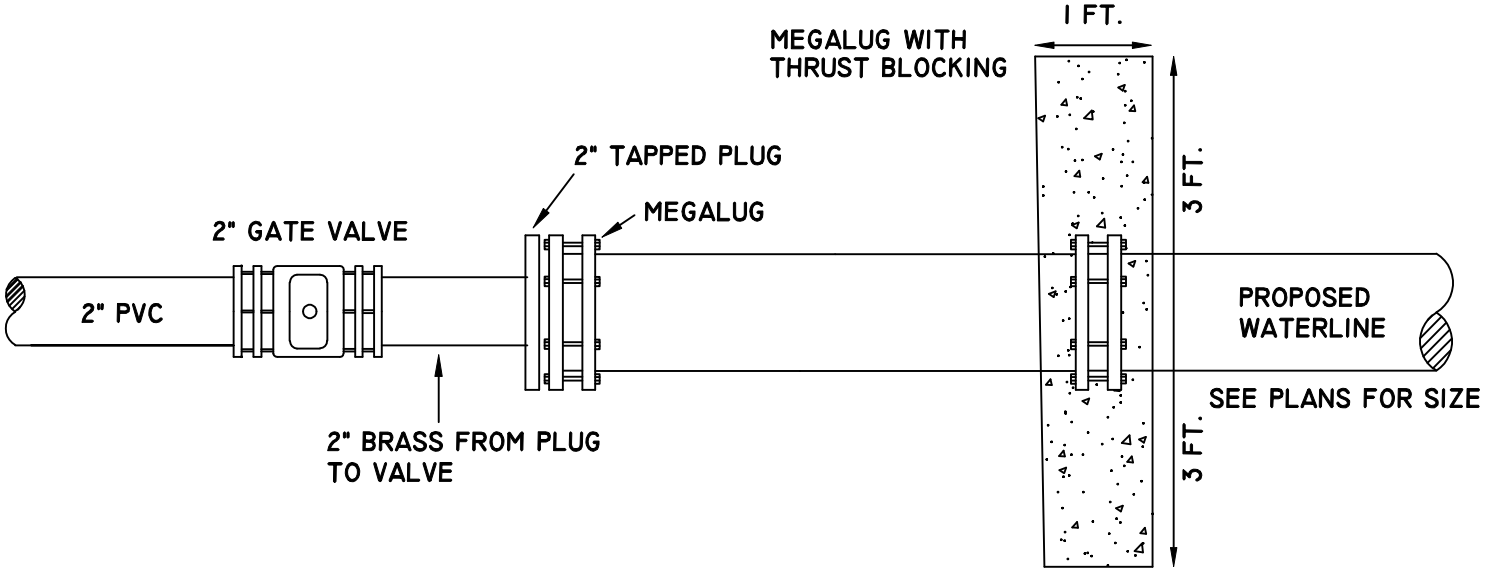

DRAWING TITLE	SCALE	DRAWING NO.	REV.
TYPICAL REDUCTION, 6" & LARGER TO 2" WATER LINE	N.T.S.	A4.7	

TABLE OF LENGTHS REQUIRING JOINT RESTRAINT FOR DUCTILE IRON PIPE

NOMINAL PIPE DIAMETER (INCHES)	PRESSURE CLASS	(A) HORIZONTAL BENDS AND VERTICAL-UP BENDS AS FUNCTION OF BEND ANGLE				(B) VERTICAL-DOWN BENDS AS FUNCTION OF BEND ANGLE				('C) HORIZONTAL TEE BASED ON BRANCH SIZE	(D) DEAD ENDS	(E) REDUCERS		
		11.25	22.5	45	90	11.25	22.5	45	90					
		RESTRAINED LENGTH, FT	RESTRAINED LENGTH, FT	RESTRAINED LENGTH, FT	RESTRAINED LENGTH, FT	RESTRAINED LENGTH, FT	RESTRAINED LENGTH, FT	RESTRAINED LENGTH, FT	RESTRAINED LENGTH, FT	RESTRAINED LENGTH, FT	RESTRAINED LENGTH, FT	LARER PIPE SIZE, IN	SMALLER PIPE SIZE, IN	RESTRAINED LENGTH, FT
4	350	N/A	N/A	18	36	N/A	N/A	18	54	36	36	4	3	N/A
6	350	N/A	N/A	18	54	N/A	18	36	72	36	36	6	4	36
8	350	N/A	18	36	72	N/A	18	36	108	54	54	8	6	36
10	350	N/A	18	36	90	N/A	18	54	126	72	72	10	8	36
12	350	N/A	18	36	108	18	36	54	144	72	72	12	10	36
16	250	N/A	36	54	144	18	36	72	198	90	90	16	12	54
20	250	18	36	72	180	18	54	108	234	126	126	20	18	18
24	200	18	36	72	198	36	54	126	288	144	144	24	20	54

BASED ON "THRUST RESTRAINT DESIGN FOR DUCTILE IRON PIPE", 4TH EDITION, 1997, DIPRA

NOTES:

1. ALL PIPE JOINTS THAT FALL WITHIN THE RESTRAINED LENGTHS SHOWN FOR THE VARIOUS CONFIGURATIONS SHALL BE RESTRAINED JOINTS. JOINT RESTRAINING GASKETS ARE PREFERRED. MECHANICAL JOINTS SHALL HAVE MEGALUGS.
2. IF ANOTHER BEND, TEE, OR REDUCER FALLS WITHIN THE RESTRAINED LENGTH, THE TABLE VALUES MUST BE ADJUSTED. ADJUSTED IN-LINE REDUCERS. MAY ALSO REQUIRE ADDITIONAL JOINT. IF THE CONTRACT DRAWINGS HAVE NO SPECIFIC INSTRUCTIONS, CONSULT THE PROJECT MANAGER.

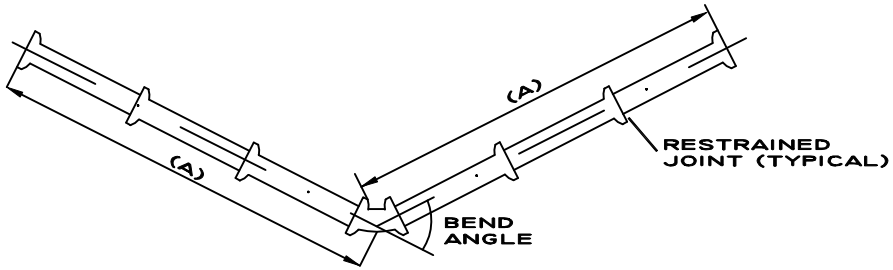

HORIZONTAL BENDS & VERTICAL BENDS UP

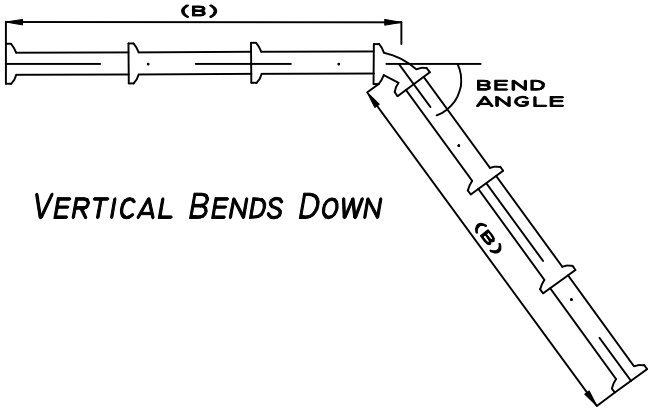

VERTICAL BENDS DOWN

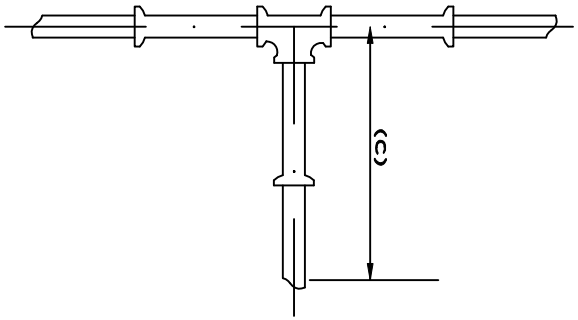

HORIZONTAL TEES

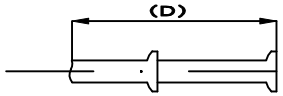

DEAD ENDS

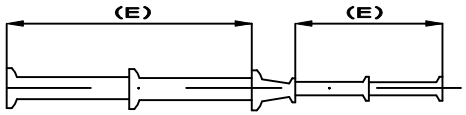

REDUCERS

DRAWING TITLE: TYPICAL REDUCTION, 6" & LARGER TO 2" WATER LINE

SCALE: N.T.S.

DRAWING NO.: A4.8

REV.

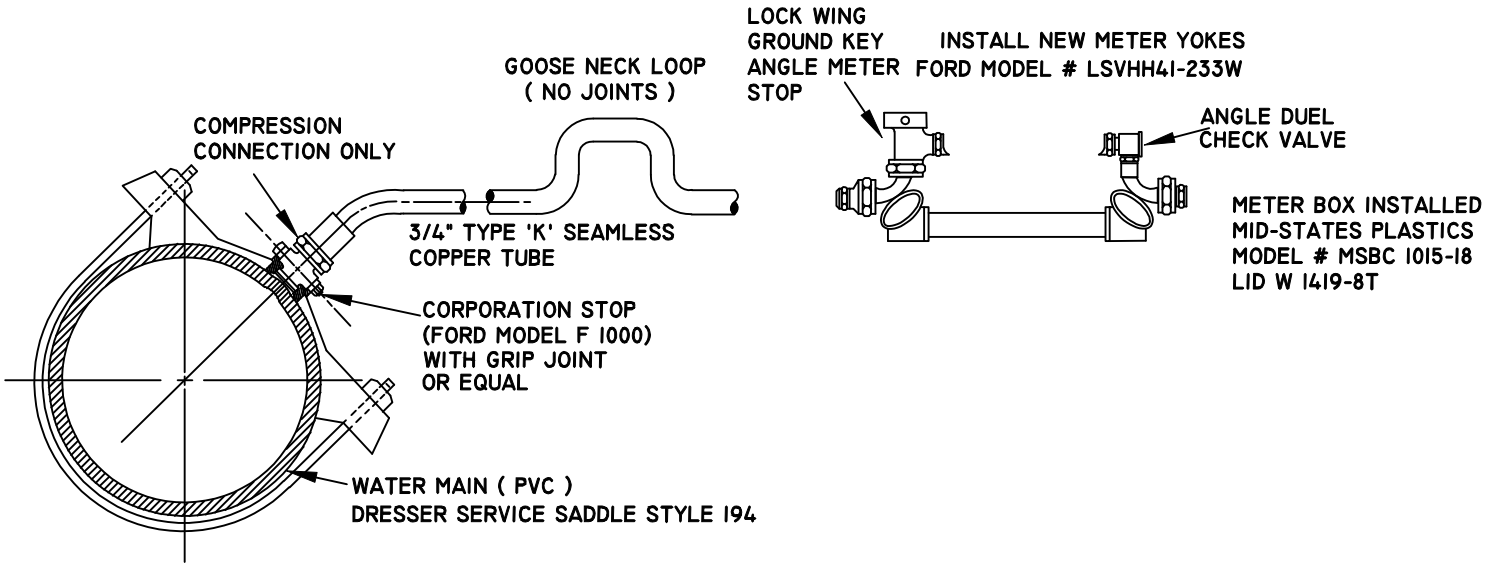

NOTE: ON WATERLINES, ALL CURB STOPS
AND METER BOXES TO BE FORD OR EQUAL.

PIPE SIZES TO BE SHOWN ON PLANS

PVC Water Main

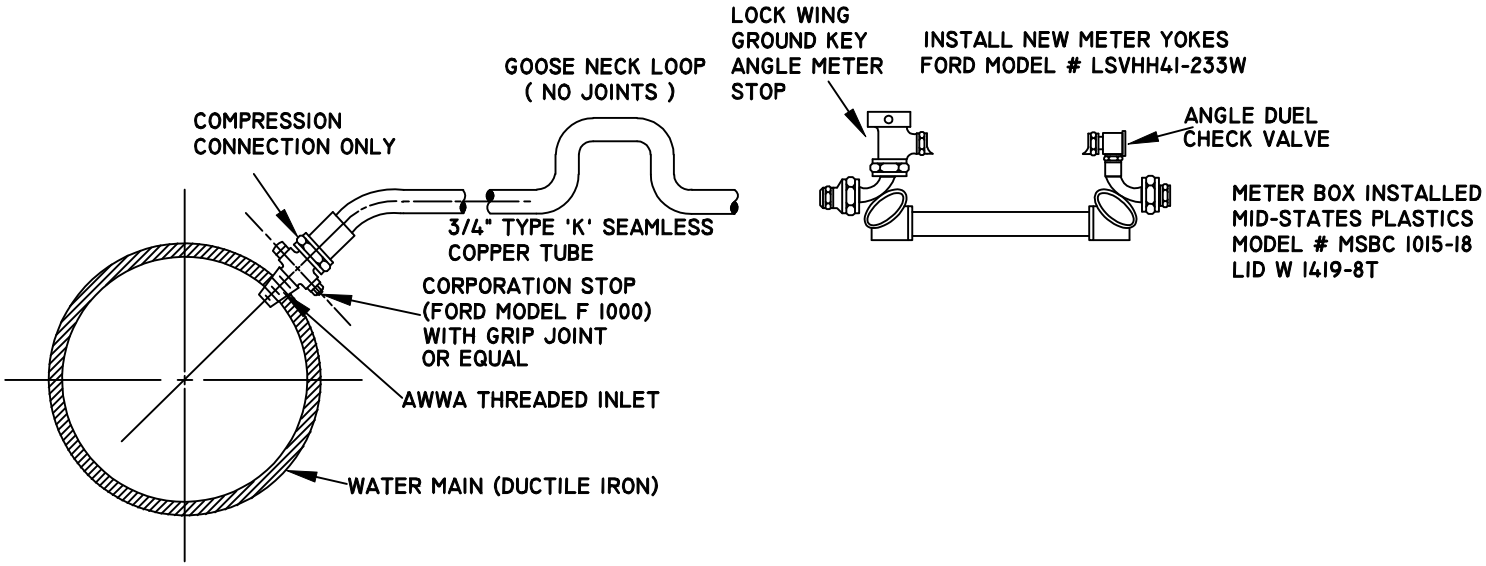

Ductile Iron Water Main

DRAWING TITLE	SCALE	DRAWING NO.	REV.
Service Lines	*N.T.S.*	*A4.9*	

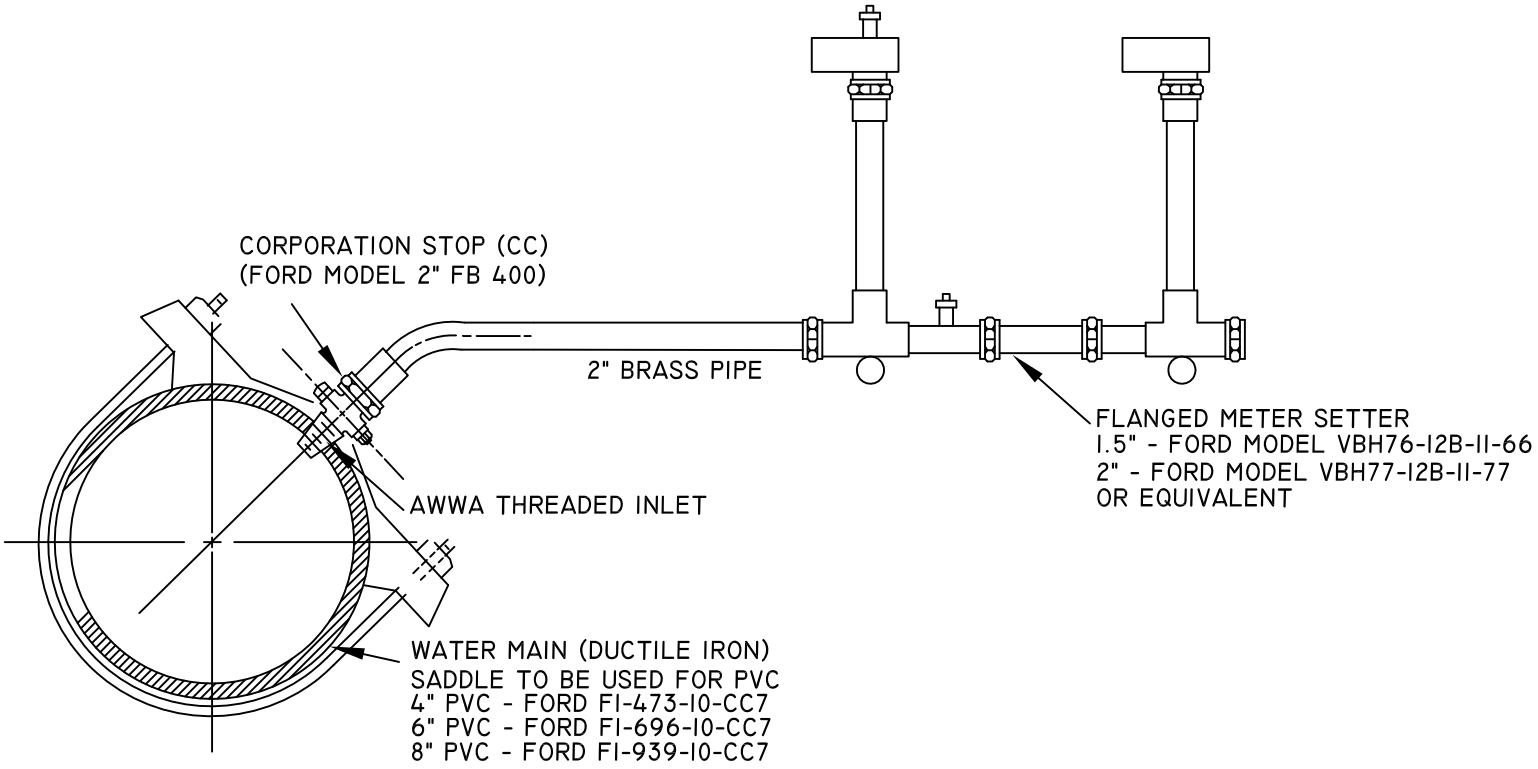

SHORT SIDE METER CONNECT

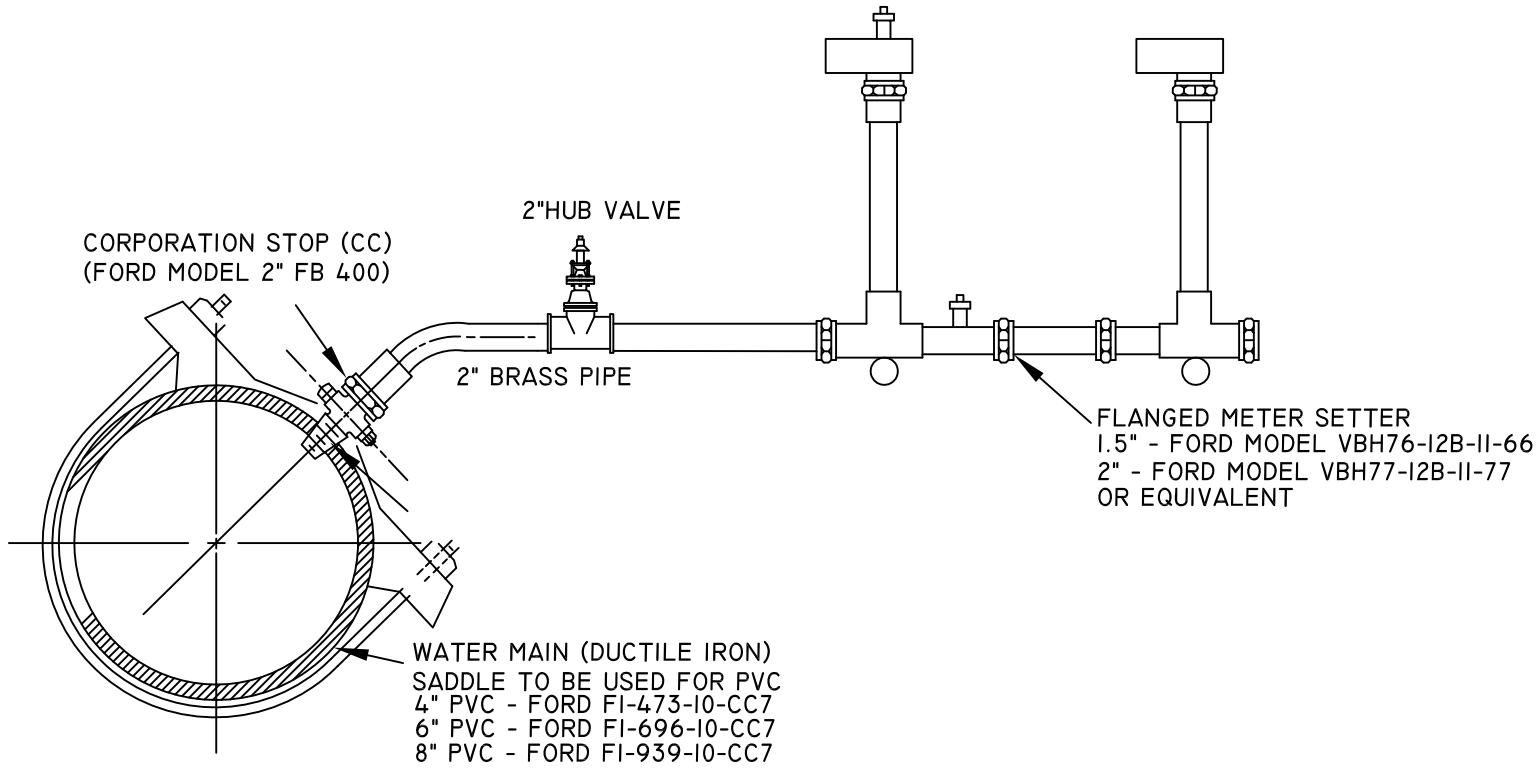

LONG SIDE METER CONNECT

DRAWING TITLE	SCALE	DRAWING NO.	REV.
SERVICE LINES, 2" METERS	N.T.S.	A4.10	1

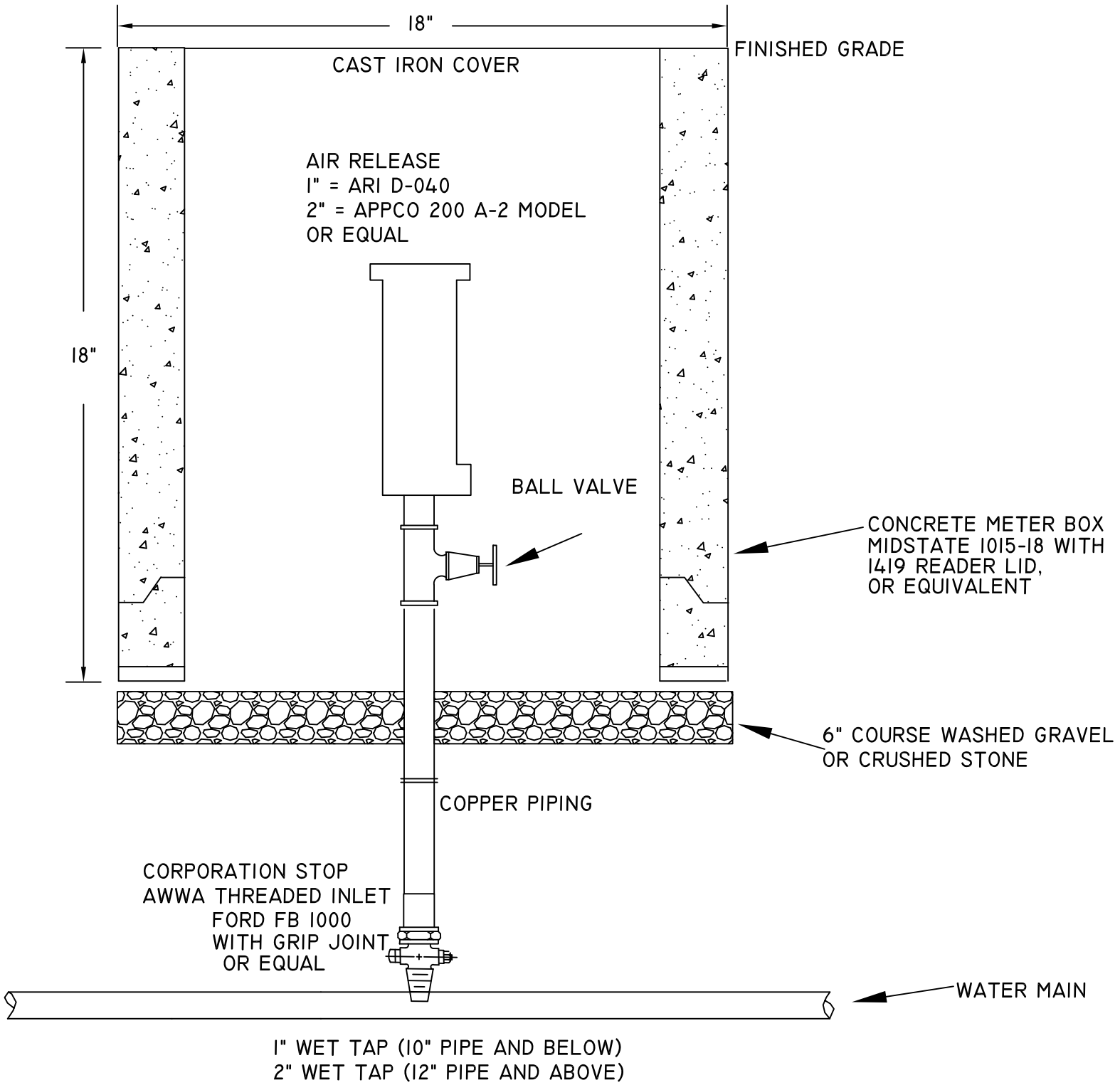

DRAWING TITLE	SCALE	DRAWING NO.	REV.
Air Release Valve & Vault in Soil	*N.T.S.*	*A4.11*	*1*

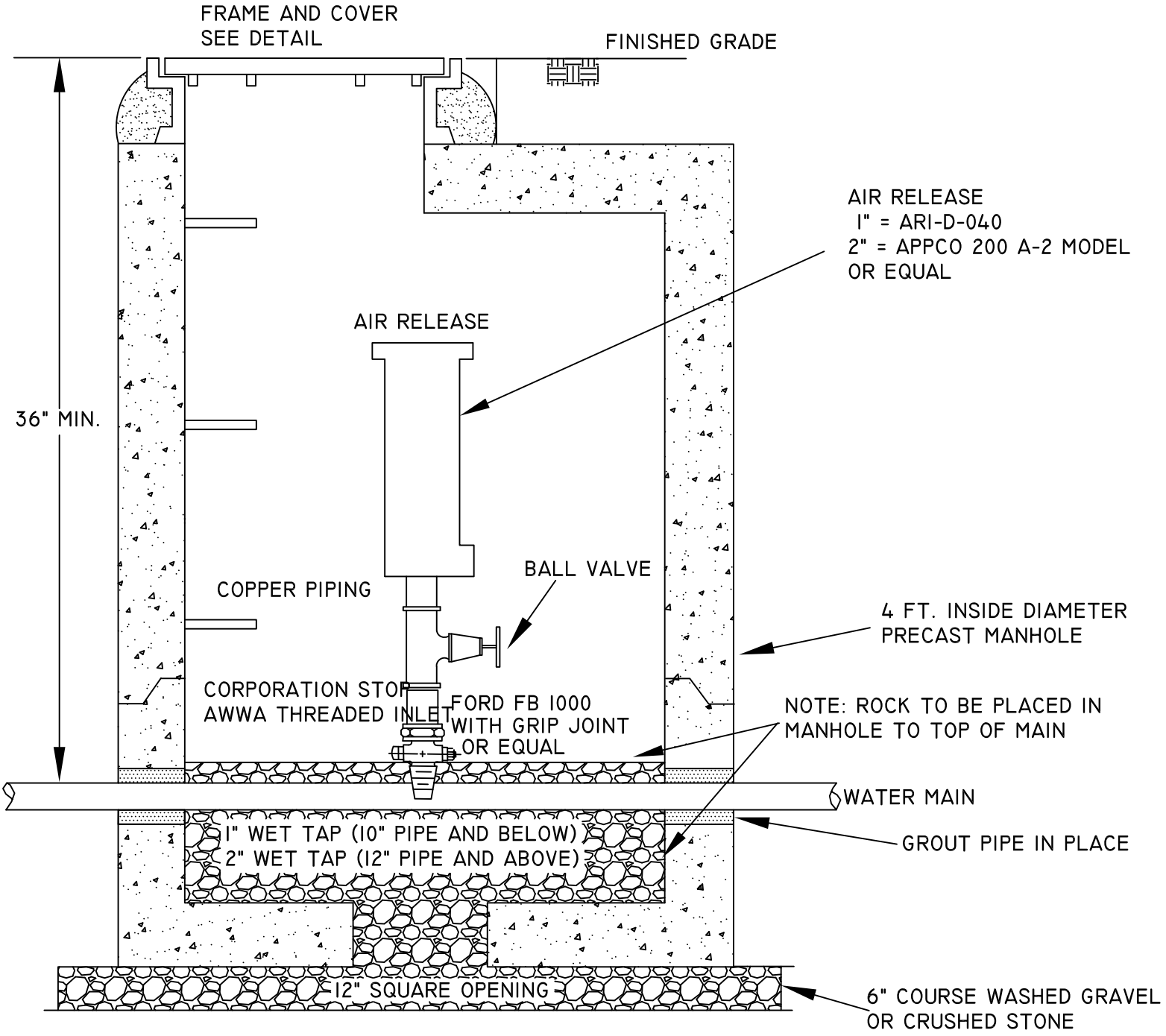

DRAWING TITLE	SCALE	DRAWING NO.	REV.
Air Release Valve & Vault in Street	*N.T.S.*	*A4.12*	*1*

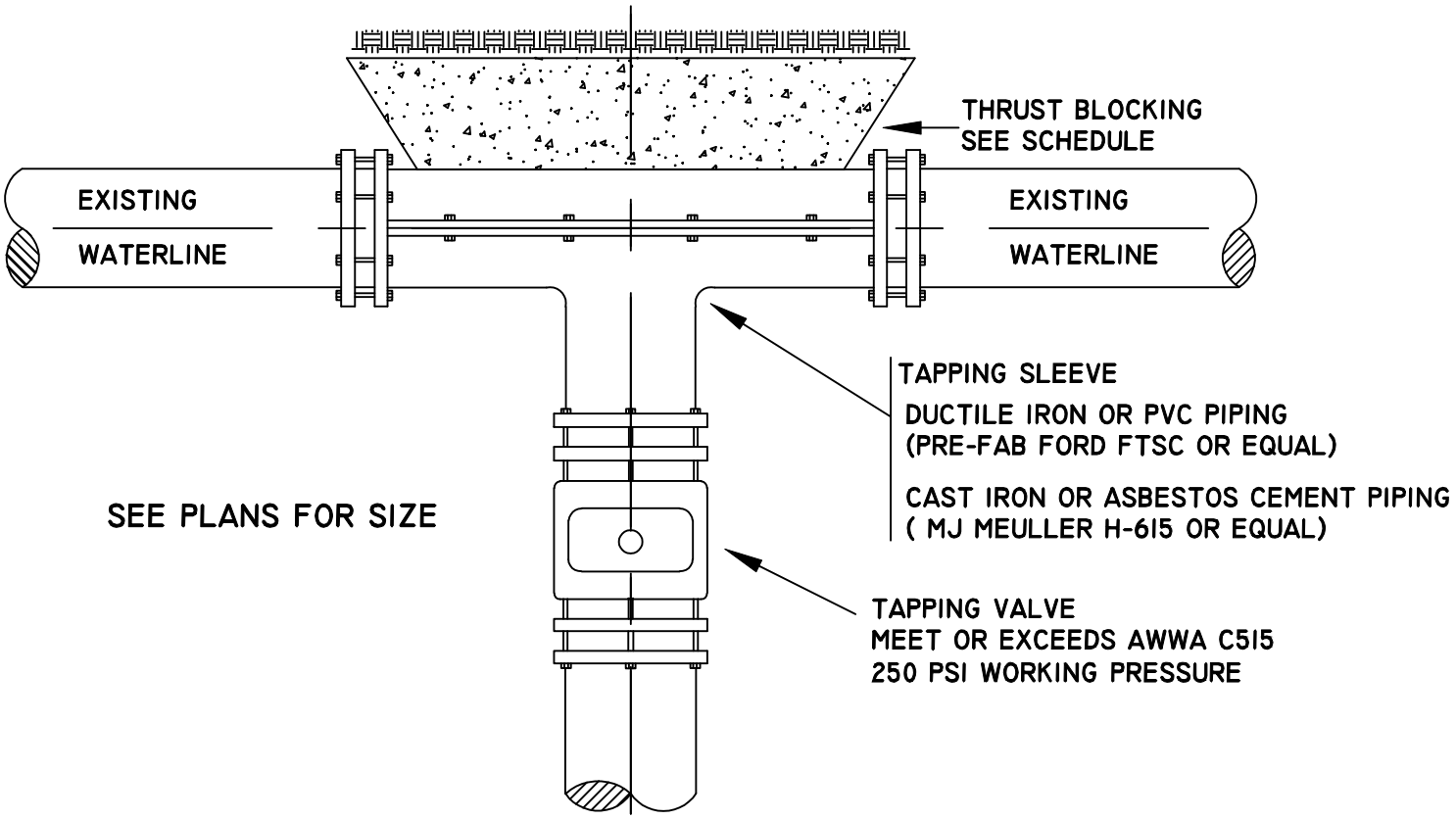

DRAWING TITLE	SCALE	DRAWING NO.	REV.
Typical Tapping Valve and Sleeve	*N.T.S.*	*A4.13*	

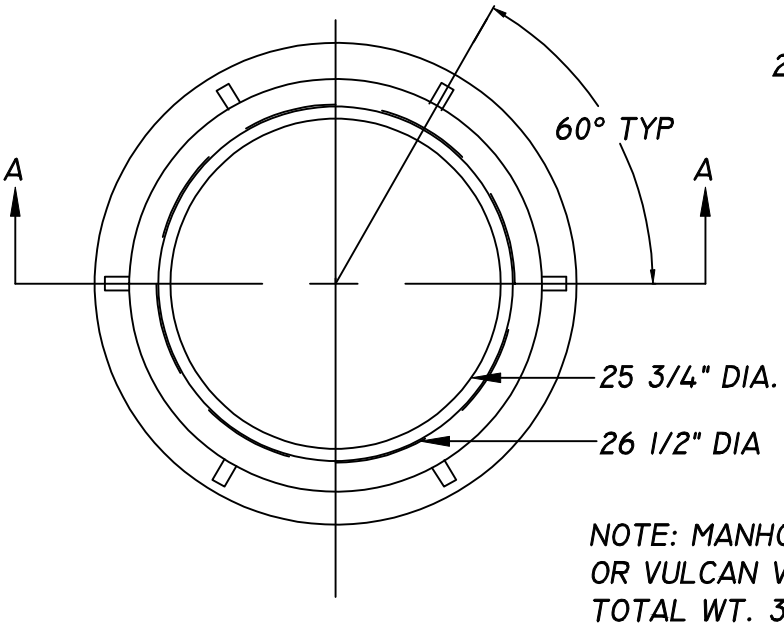

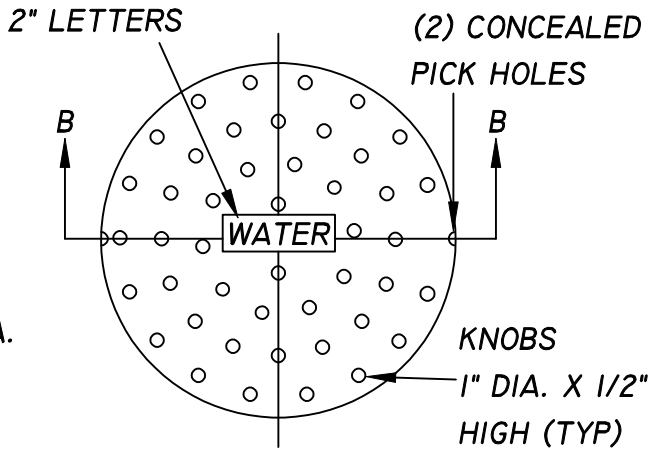

NOTE: MANHOLE FRAMES & LIDS TO BE NEEHAN R-1643 OR VULCAN V-1312-61
TOTAL WT. 375 LBS. - FRAMES & COVERS SHALL BE MACHINED TO FIT.

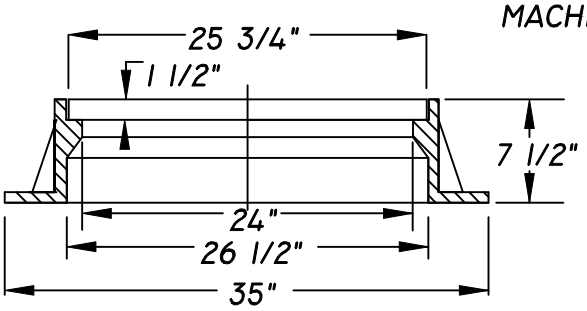

SECTION A:A

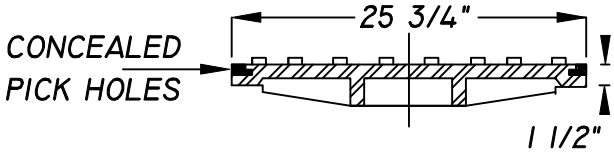

SECTION B:B

TYPICAL AIR RELEASE VAULT IN STREET
PRESSURE REDUCING VAULT

DRAWING TITLE	SCALE	DRAWING NO.	REV.
TYPE 'A' CI MANHOLE FRAME & COVER	N.T.S.	A4.14	

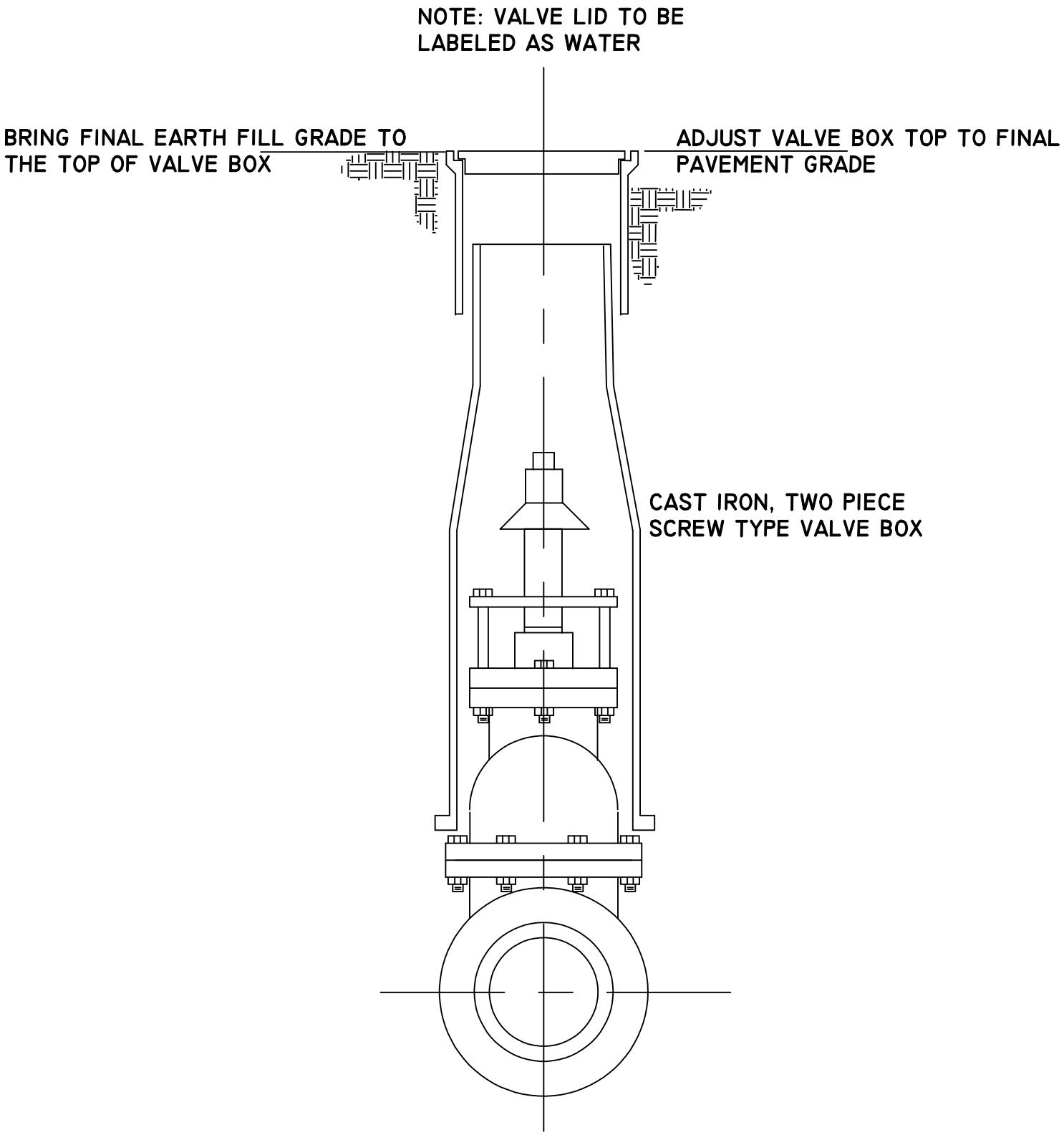

DRAWING TITLE	SCALE	DRAWING NO.	REV.
Typical Valve Box Setting	*N.T.S.*	*A4.15*	

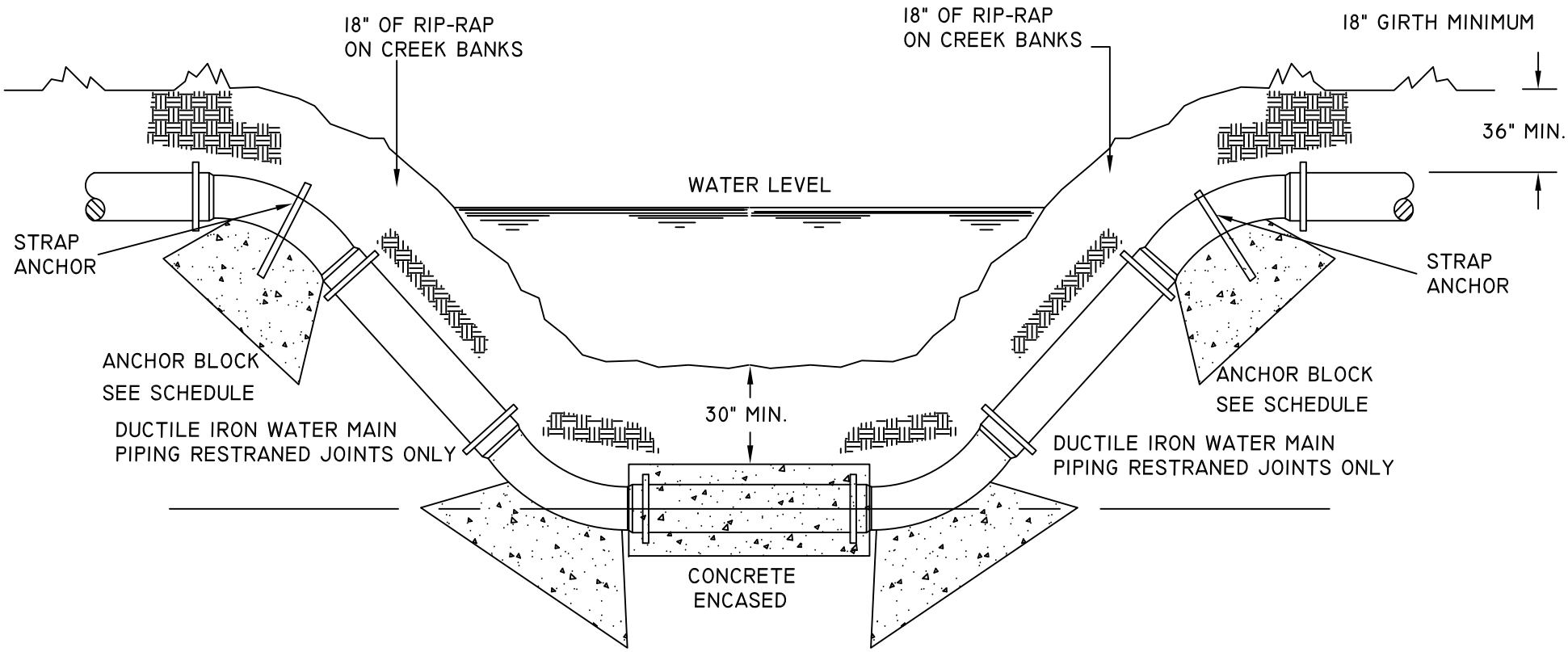

NOTES:

1. BLOCK AND PAD SIZES INDICATED IN SCHEDULE ARE FOR SOILS WITH A MIN. BEARING CAPACITY OF 2500 P.S.F. REMOVE SOILS WHICH ARE OF LESSER STRENGTH.
2. FOR DETAILS COVERING CONDITION NOT SHOWN SUBMIT TO PROJECT MANAGER FOR APPROVAL.
3. ALL JOINTS TO BE RESTRAINED WITH MEGA-LUG OR EQUAL.
4. ALL PUSH-ON JOINTS WITHIN 12' OF A BEND SHALL BE INSTALLED WITH GRIP-RING STYLE GASKETS PER MANUFACTURER RECOMMENDATIONS.

DRAWING TITLE
TYPICAL CREEK CROSSING, WATER MAIN

SCALE
N.T.S.

DRAWING NO.
A4.16

REV.
1

1. ALL JOINTS SHALL BE RESTRAINED WITH MEGA-LUG OR EQUAL.
2. ALL PUSH-ON JOINTS WITHIN 12' OF A BEND SHALL BE RESTRAINED WITH GRIP-RING STYLE GASKET AS RECOMMENDED BY PIPE MANUFACTURER.

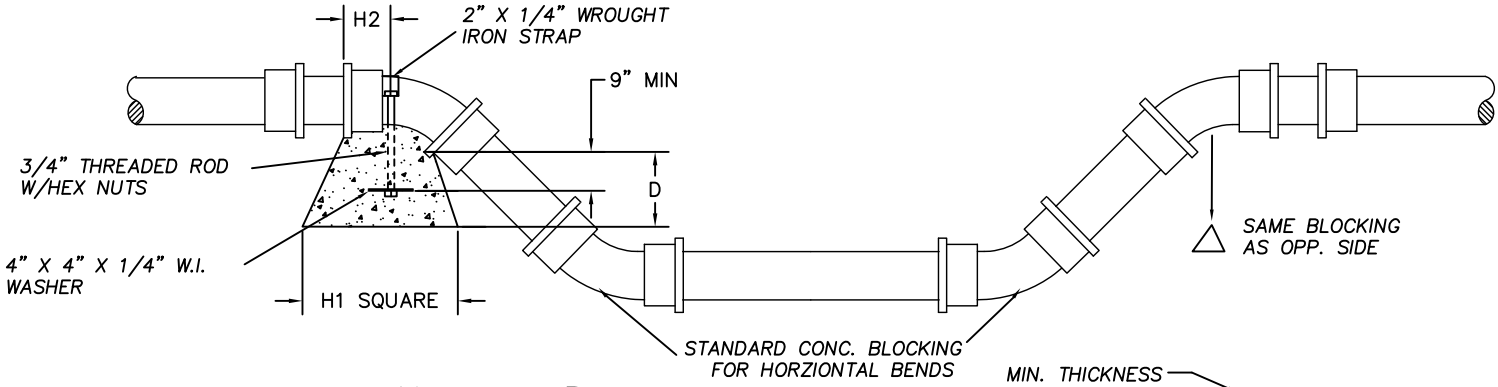

VERTICAL BENDS

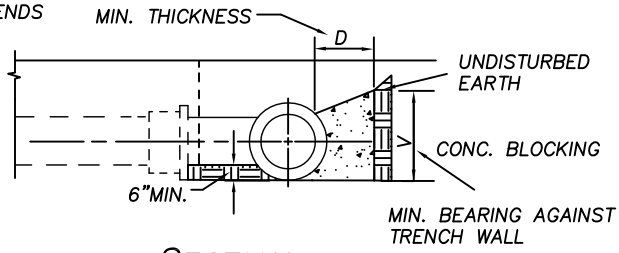

SECTION

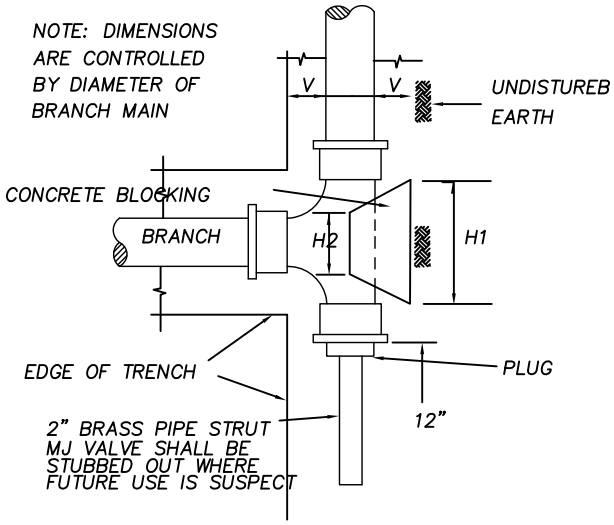

TEES, CROSSES AND PLUGS

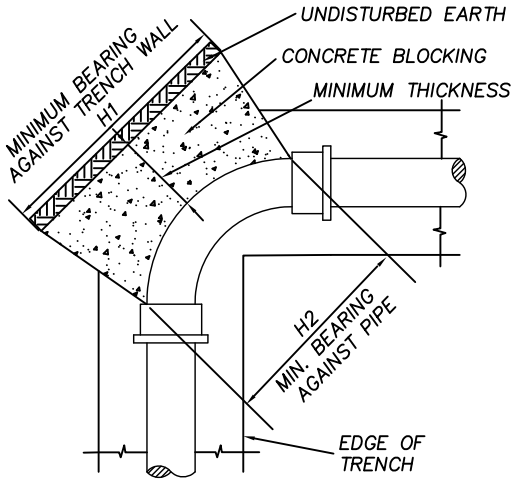

HORIZONTAL BENDS

TABLE OF DIMENSIONS FOR CONCRETE BLOCKING

SIZE	TEES, CROSSES & PLUGS					90° BENDS					45° BENDS					22 1/2° BENDS					11 1/4° BENDS					SIZE
PIPE	H1	H2	V	D	CU. FT.	H1	H2	V	D	CU. FT.	H1	H2	V	D	CU. FT.	H1	H2	V	D	CU. FT.	H1	H2	V	D	CU. FT.	PIPE
2"& 2 1/4"	18"	10"	12"	18"	1.90	18"	10"	12"	18"	1.90	18"	6"	12"	18"	1.50	18"	6"	12"	18"	1.50	18"	6"	12"	18"	1.50	2"& 2 1/4"
3"& 4"	24"	12"	12"	18"	2.25	24"	12"	12"	18"	2.25	18"	8"	12"	18"	1.60	18"	8"	12"	18"	1.60	18"	8"	12"	18"	1.60	3"& 4"
6"	24"	16"	18"	18"	3.50	30"	16"	18"	18"	4.05	24"	10"	16"	18"	3.20	24"	10"	16"	18"	3.20	24"	10"	16"	18"	3.20	6"
8"	36"	18"	18"	18"	5.05	39"	18"	24"	18"	7.30	30"	11"	18"	18"	3.95	24"	11"	18"	18"	3.45	24"	11"	16"	18"	3.40	8"
10"	48"	24"	18"	24"	7.15	54"	32"	24"	18"	10.25	24"	18"	21"	18"	4.60	24"	18"	21"	18"	4.60	24"	18"	21"	18"	4.60	10"
12"	54"	30"	24"	24"	13.4	54"	32"	36"	24"	18.15	42"	18"	24"	24"	9.60	24"	18"	24"	24"	6.60	24"	18"	21"	24"	6.10	12"
14"	60"	32"	30"	24"	17.9	60"	40"	42"	24"	25.0	44"	24"	30"	24"	13.2	30"	24"	24"	24"	9.2	27"	21"	24"	24"	7.90	14"
16"	66"	34"	36"	24"	22.5	69"	48"	48"	24"	29.0	48"	30"	36"	24"	17.0	36"	30"	27"	24"	11.8	27"	24"	27"	24"	9.10	16"
18"	72"	36"	40"	24"	30.0	72"	48"	60"	24"	38.0	48"	30"	42"	24"	21.0	42"	30"	30"	24"	15.0	30"	30"	36"	24"	13.0	18"
20"	84"	38"	42"	24"	36.0	84"	48"	66"	24"	48.0	54"	40"	46"	24"	27.0	48"	36"	36"	24"	19.0	42"	40"	36"	24"	18.0	20"
24"	108"	42"	48"	24"	45.0	108"	60"	72"	24"	68.0	60"	48"	56"	24"	41.0	54"	42"	42"	24"	25.0	48"	42"	42"	24"	23.0	24"
30"	132"	52"	60"	24"	70.0	132"	72"	92"	24"	104.0	72"	48"	76"	24"	58.0	60"	48"	48"	24"	32.0	54"	48"	54"	24"	32.0	30"
36"	162"	58"	72"	24"	100.0	162"	96"	108"	24"	150.0	84"	72"	84"	24"	85.0	66"	72"	60"	24"	50.0	60"	48"	60"	24"	40.0	36"

DRAWING TITLE	SCALE	DRAWING NO.	REV.
CONCRETE THRUST BLOCKING FOR WATER LINES	N.T.S.	A4.17	1

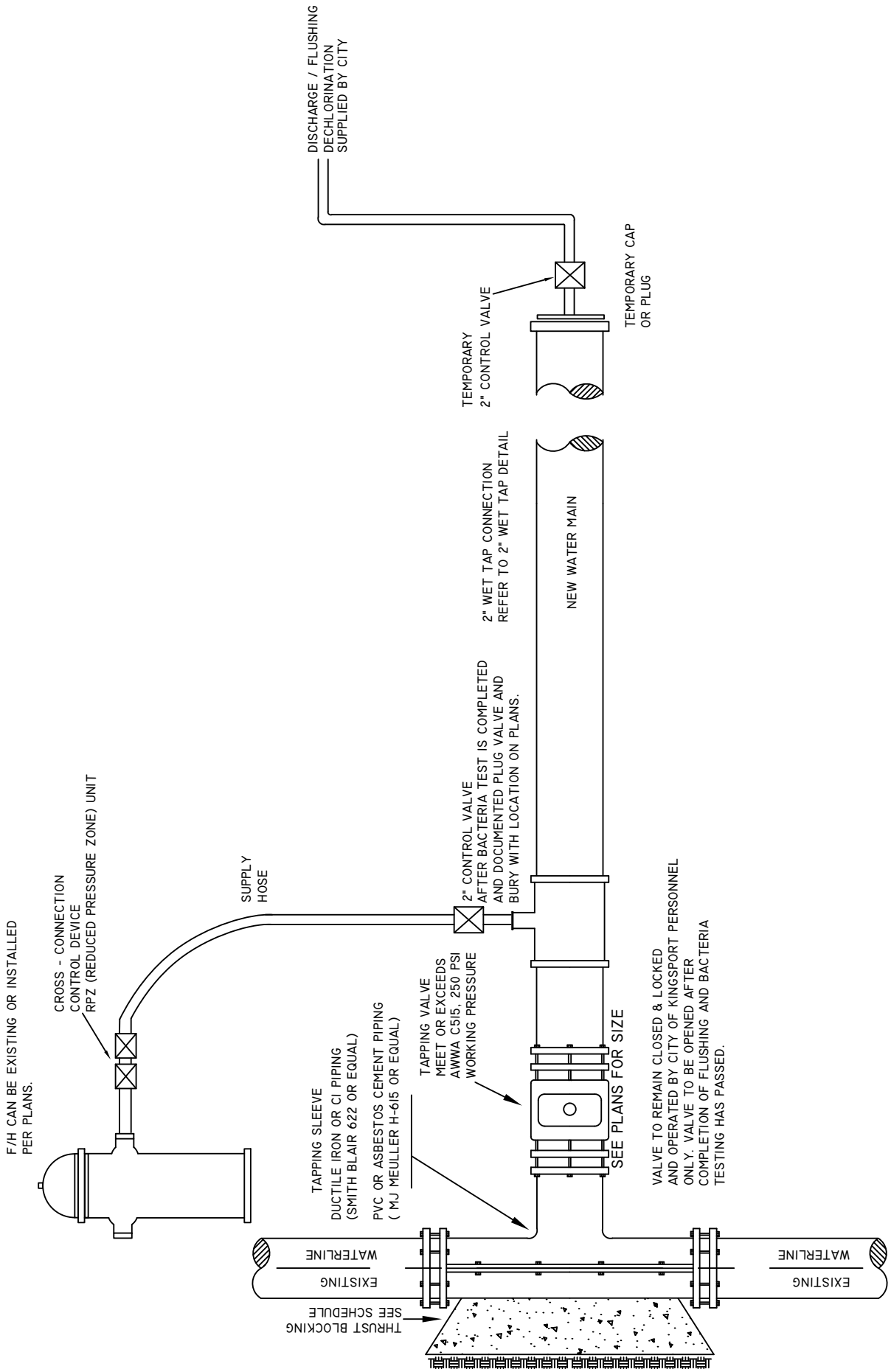

DRAWING TITLE	SCALE	DRAWING NO.	REV.
TEMP. TESTING & FLUSHING CONN. TO FIRE HYDRANT	N.T.S.	A4.18	

NOTE: AFTER BACTERIA TEST HAS BEEN COMPLETED AND DOCUMENTED ALL TEMPORARY CONNECTIONS SHALL BE REMOVED AND NEW LINE CONNECTED TO TAPPING VALVE.
AFTER REMOVAL OF TEMPORARY CONNECTIONS HAS BEEN COMPLETED A SECOND BACTERIA TEST WILL BE REQUIRED AND DOCUMENTED.

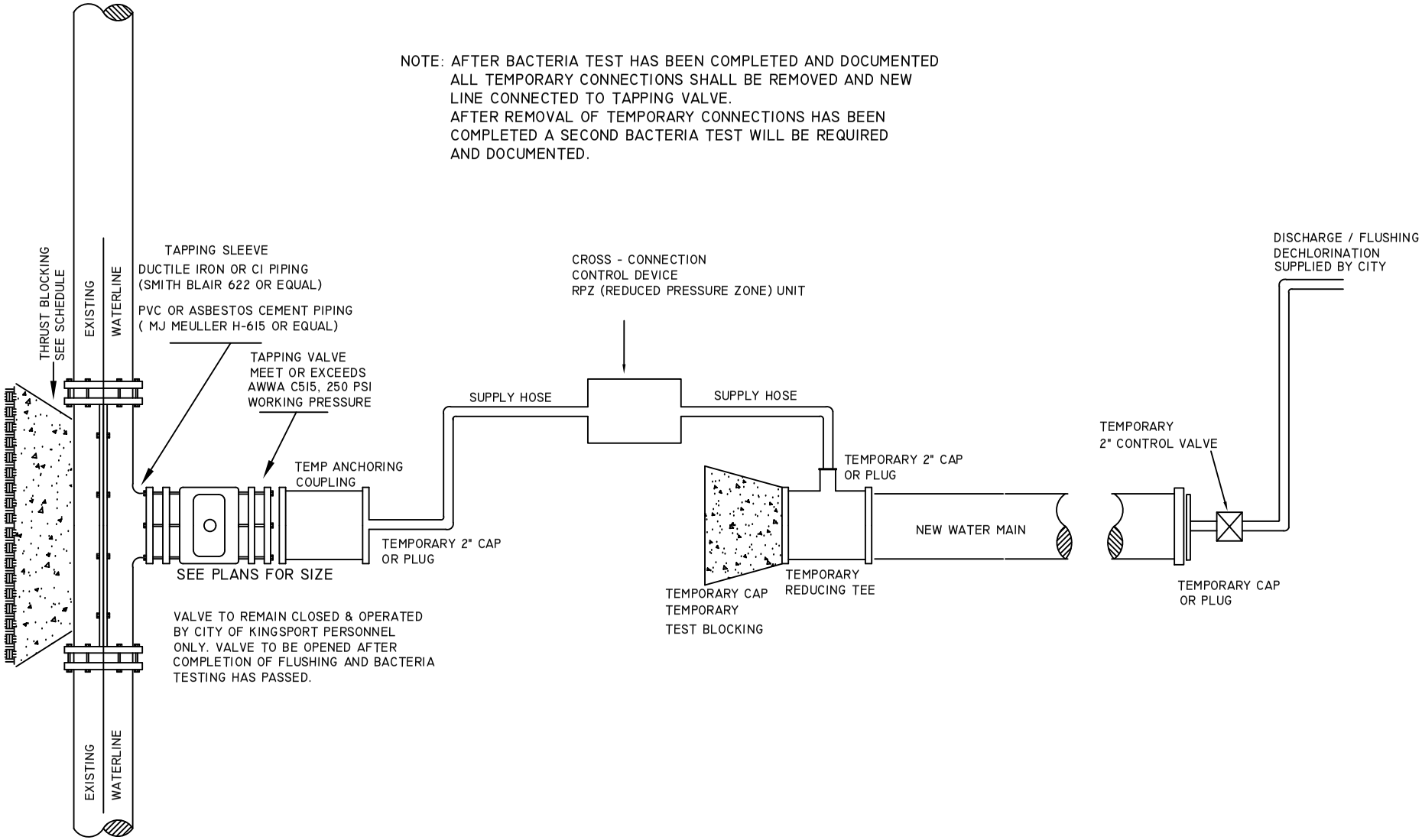

DRAWING TITLE	SCALE	DRAWING NO.	REV.
TEMP. TESTING & FLUSHING CONN. TO EXIST. WATERLINE	N.T.S.	A4.19	

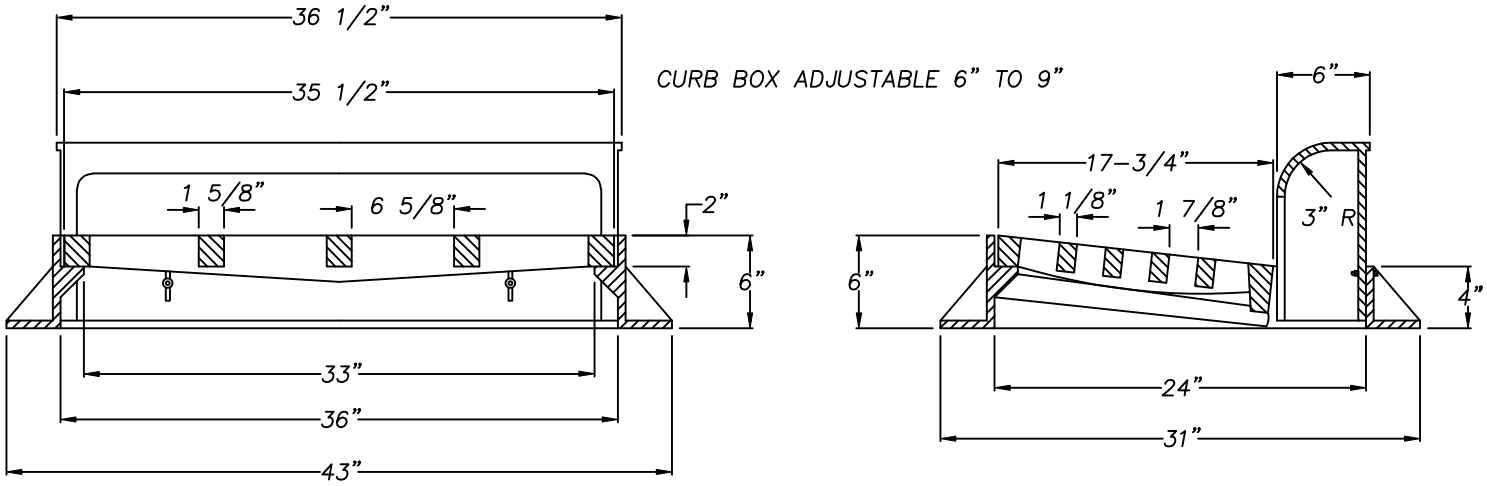

ALL STORM SEWER STRUCTURES ARE TO BE NPDES II COMPLIANT AND MARKED "DUMP NO WASTE! DRAINS TO WATERWAY".

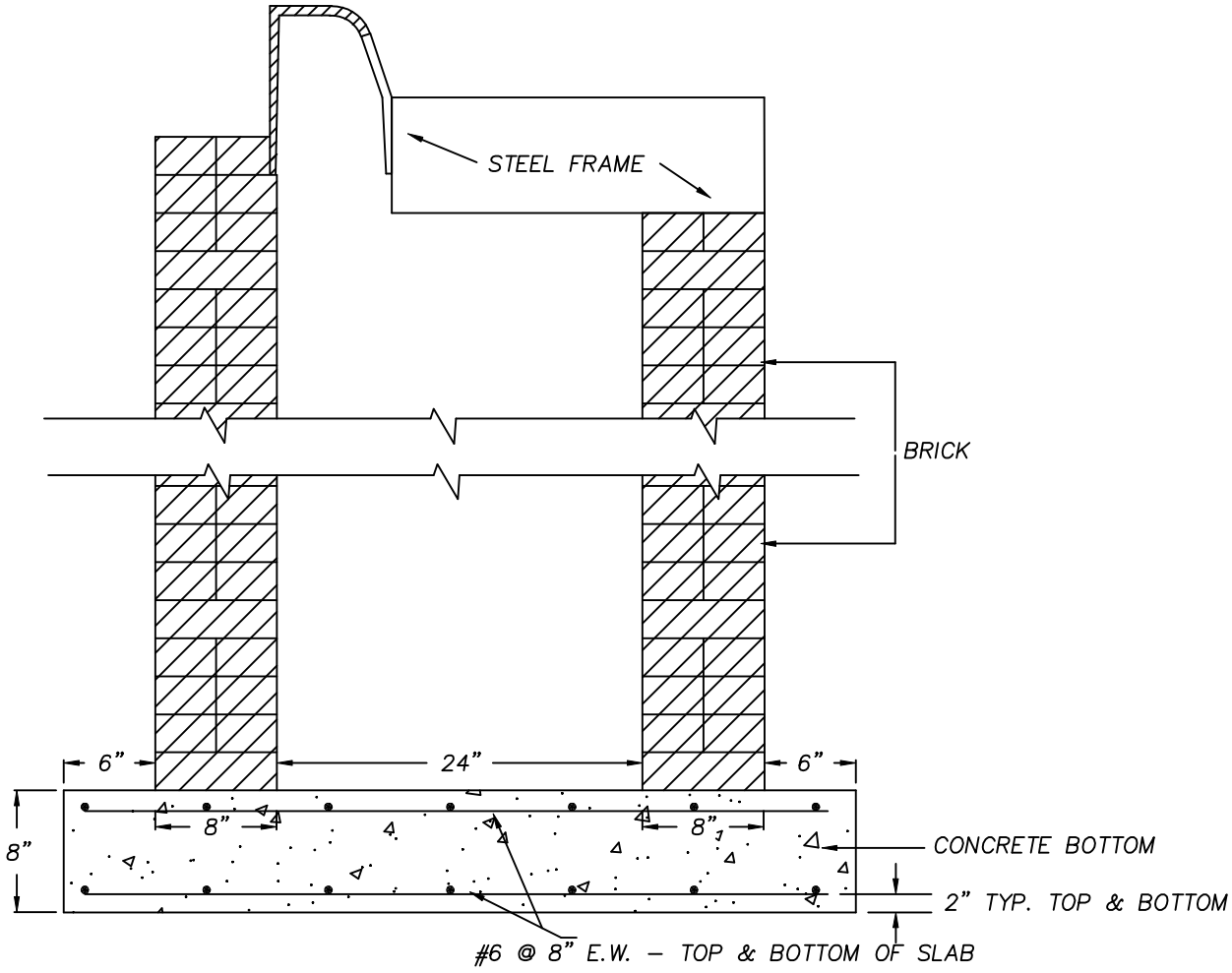

NEENAH R-3290 OR EQUAL
J.R. HOE & SONS HOE-525 OR EQUAL

DRAWING TITLE	SCALE	DRAWING NO.	REV.
CURB TYPE CATCH BASIN FRAME & GRATE	N.T.S.	A5.1	

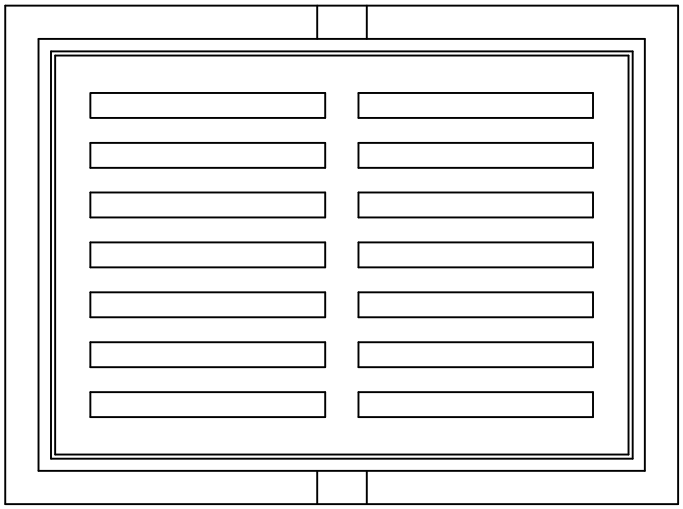

PLAN

ALL STORM SEWER STRUCTURES ARE TO BE NPDES II COMPLIANT AND MARKED "DUMP NO WASTE! DRAINS TO WATERWAY".

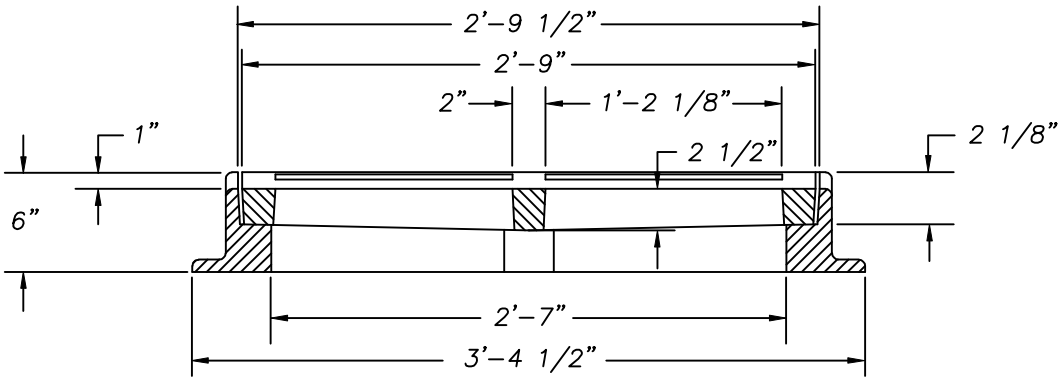

LONG SECTION

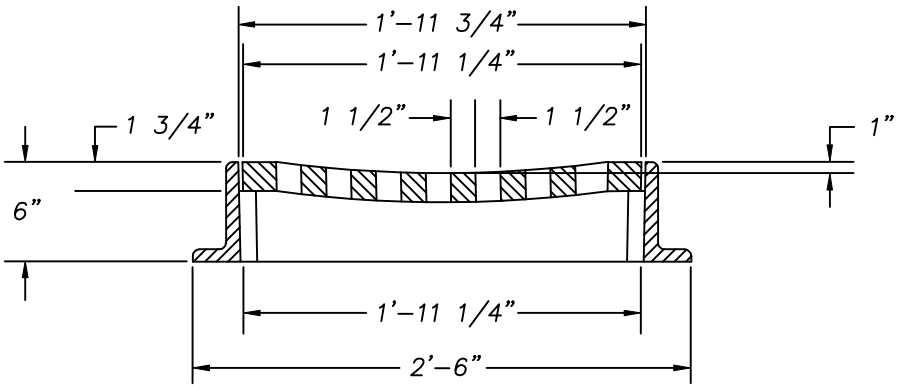

CROSS SECTION

J.R. HOE & SONS HOE-449 OR EQUAL

DRAWING TITLE	SCALE	DRAWING NO.	REV.
FLAT TYPE CATCH BASIN FRAME & GRATE	N.T.S.	A5.2	

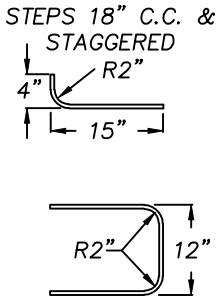

DETAILS
STEPS FOR BRICK MAHOLES

NOTE:
TOP OF MANHOLE FRAME TO EXTEND AT LEAST 10" BUT NO MORE THAN 12" ABOVE NATURAL GROUND EXCEPT WHERE LOCATED IN STREETS OR WHERE SHOWN OTHERWISE ON THE PLANS

NOTE:
WATERPROOFING 1 COAT OF INERTOL STANDARD THICK AT RATE OF 1 GALLON PER 125 SQ FT. WATER-PROOF WALLS FROM 18" BELOW FINISH GRADE DOWN TO AND OVER FOOTINGS

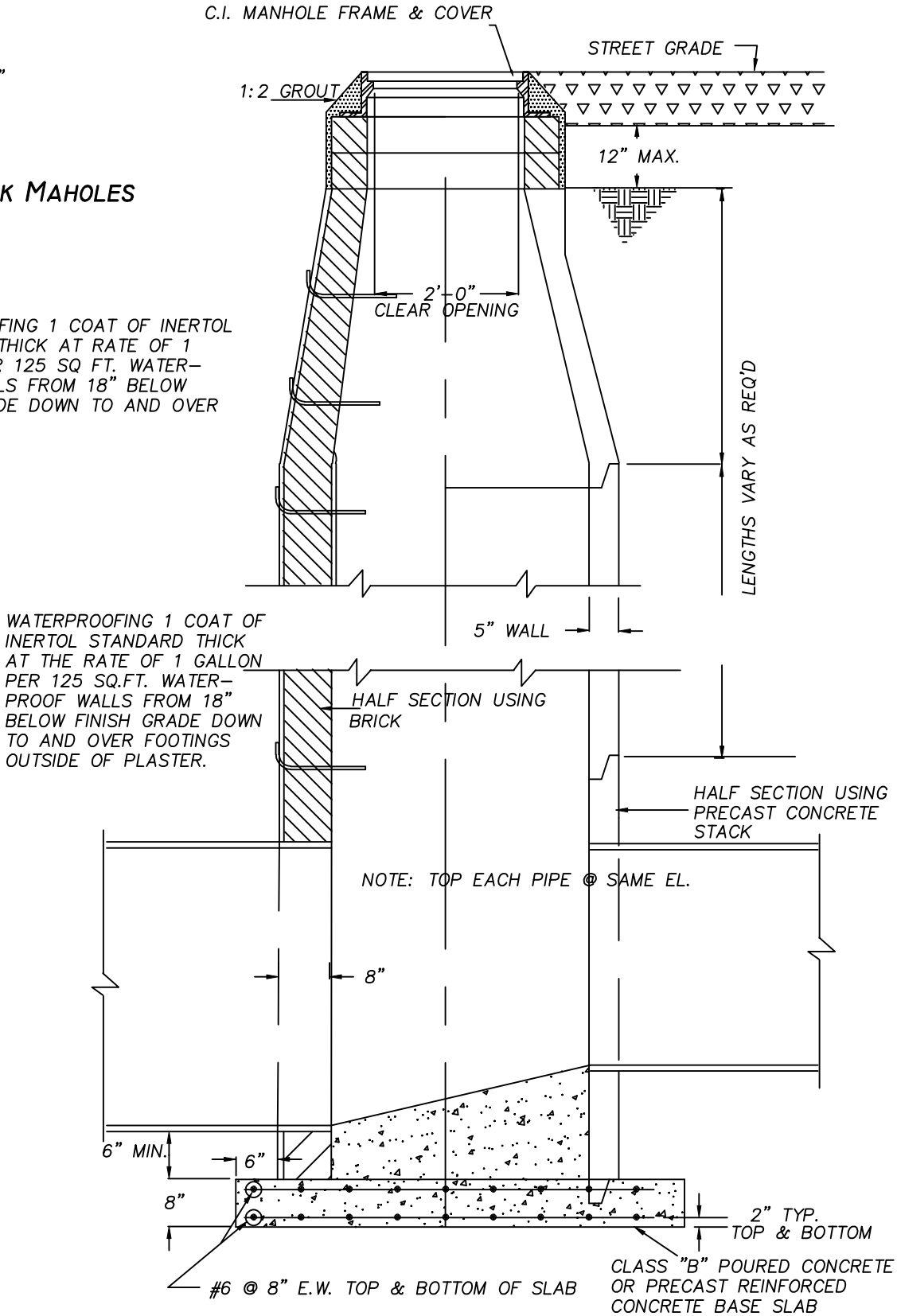

DRAWING TITLE	SCALE	DRAWING NO.	REV.
STORM SEWER MAHOLE, 4', 5', OR 6' DIAMETER	N.T.S.	A5.3	

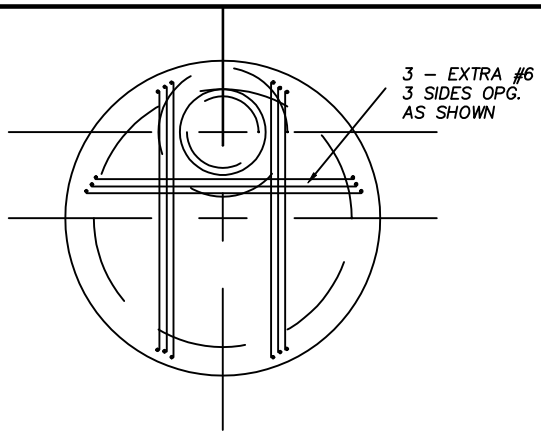

MANHOLE TOP

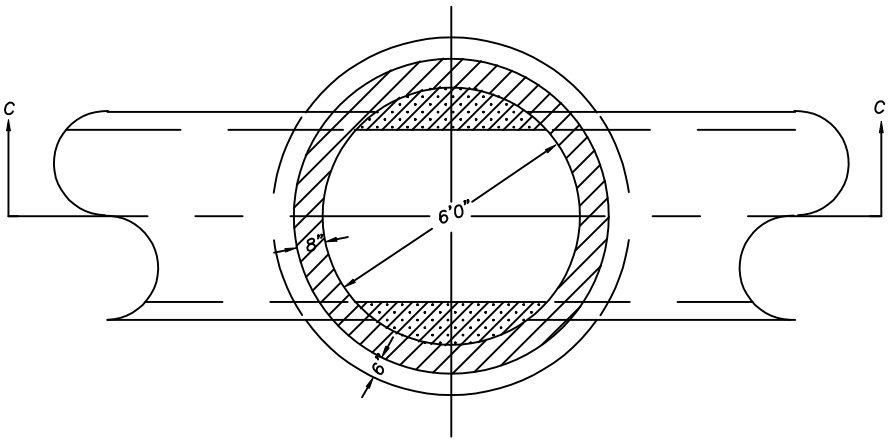

PLAN

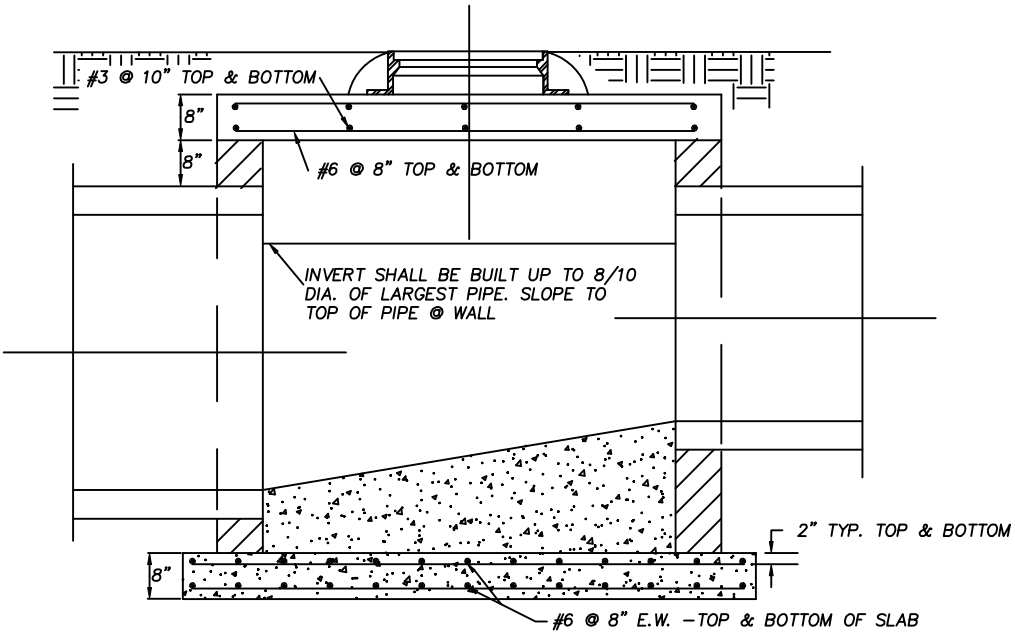

SECTION C-C

DRAWING TITLE	SCALE	DRAWING NO.	REV.
SHALLOW STORM SEWER MANHOLE	N.T.S.	A5.4	

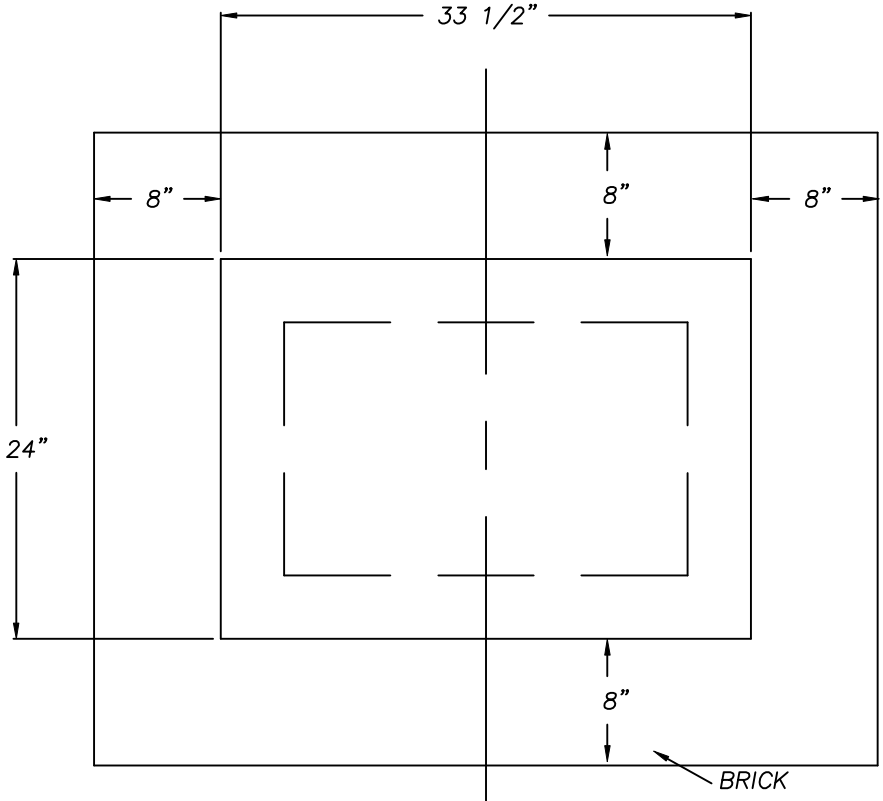

PLAN

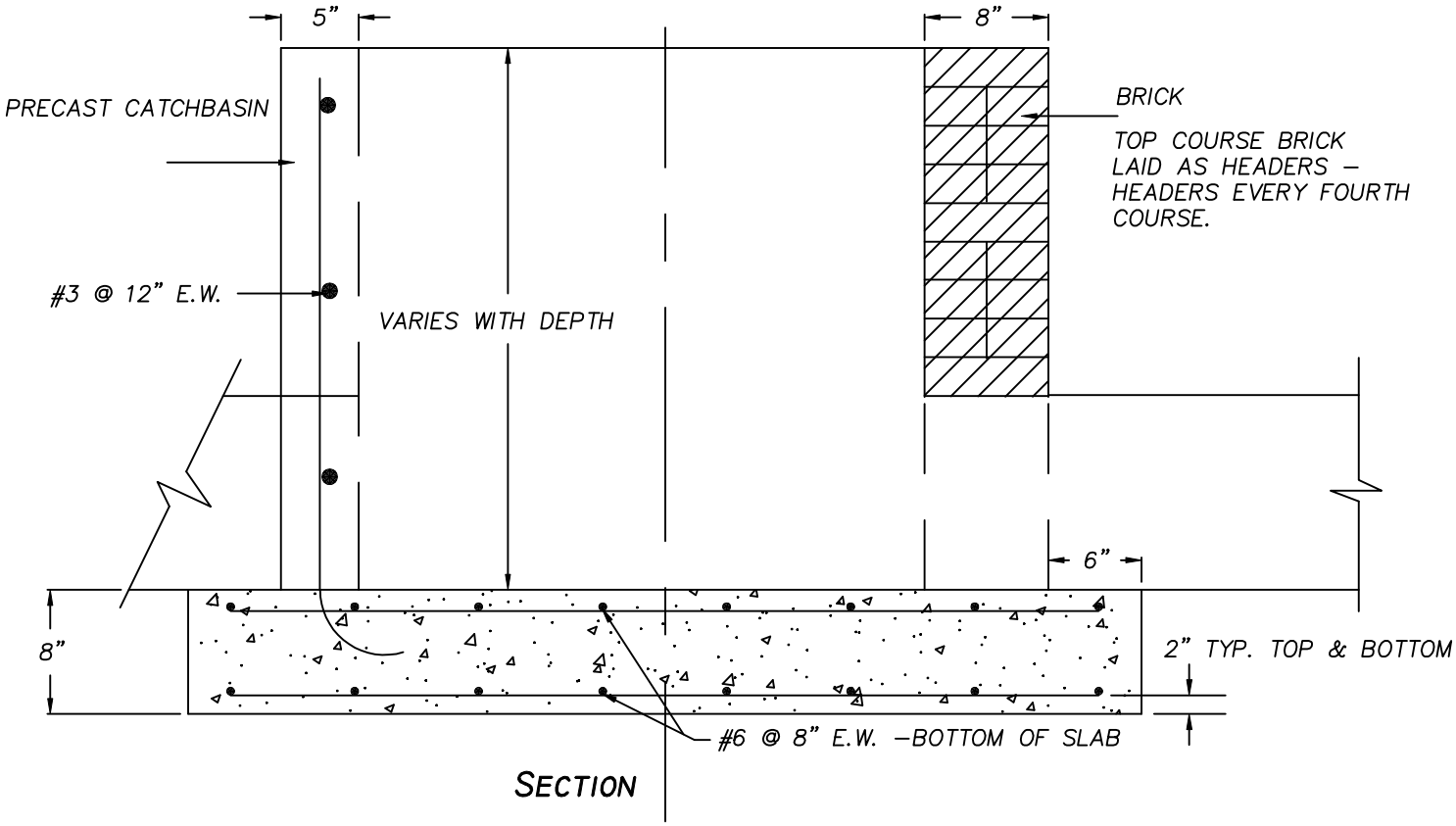

SECTION

NOTE: WHERE PRECAST CATCHBASINS ARE SUPPLIED, MANUFACTURERS RECOMMENDATIONS SHALL BE FOLLOWED

DRAWING TITLE	SCALE	DRAWING NO.	REV.
STORM SEWER CATCH BASIN	N.T.S.	A5.5	

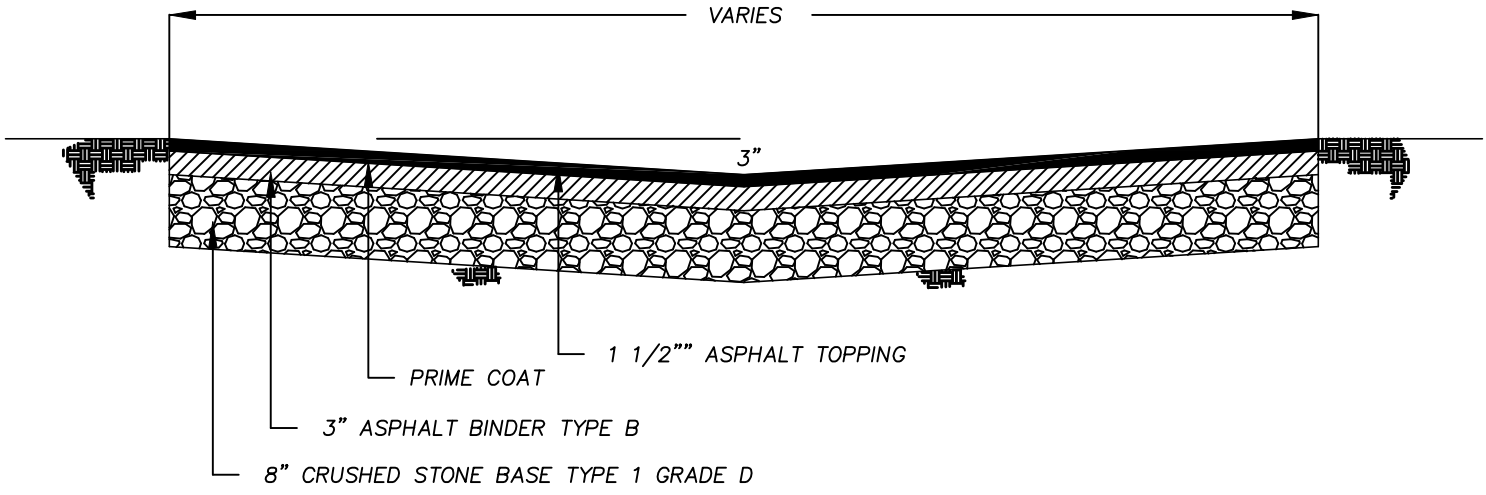

DRAWING TITLE	SCALE	DRAWING NO.	REV.
TYPICAL ALLEY SECTION	N.T.S.	A6.1	

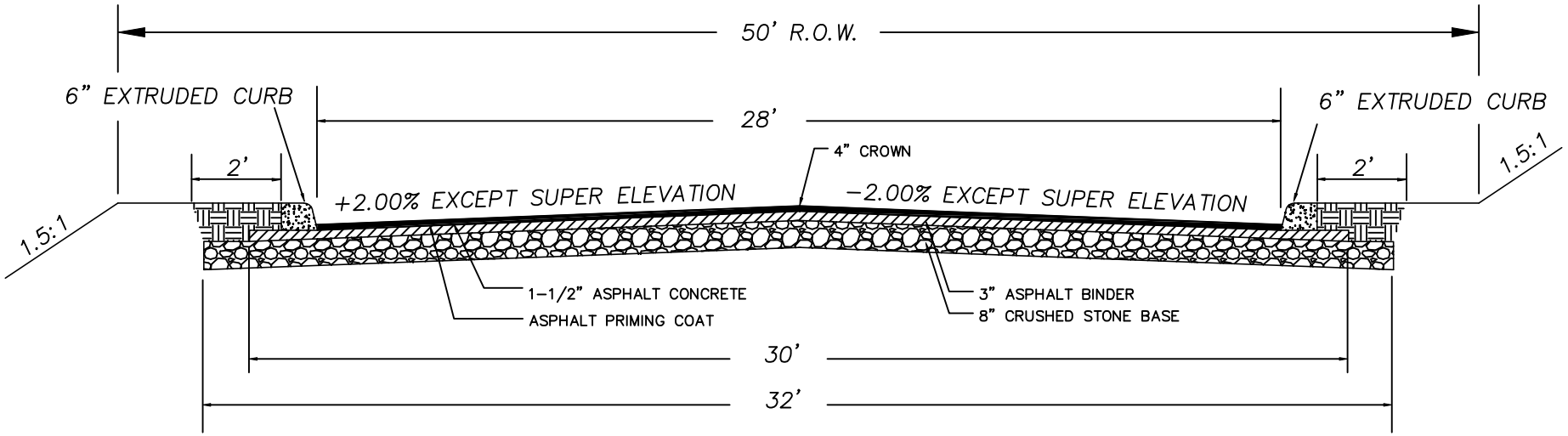

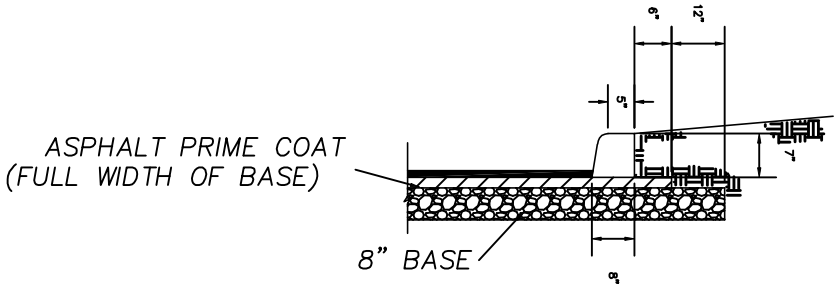

EXTRUDED CURB DETAIL

DRAWING TITLE
TYPICAL STREET CROSS SECTION

SCALE
N.T.S.

DRAWING NO.
A6.2

REV.

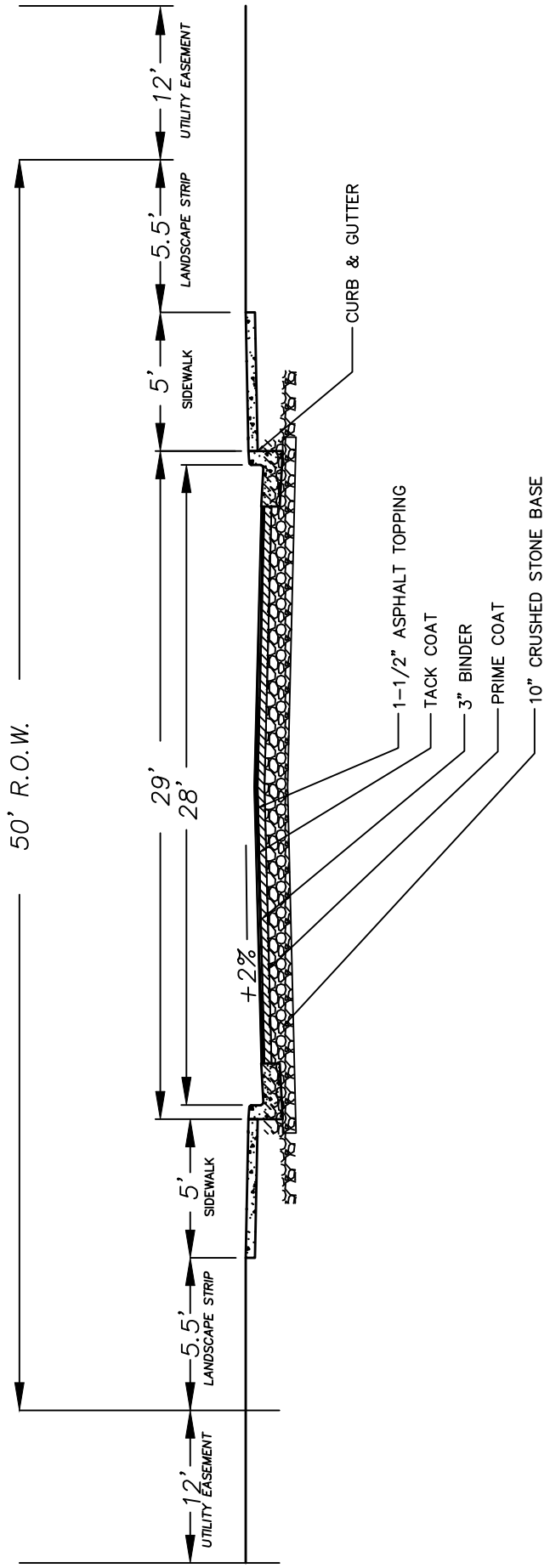

DRAWING TITLE	SCALE	DRAWING NO.	REV.
TYPICAL COMMERCIAL STREET CROSS SECTION	N.T.S.	A6.3	

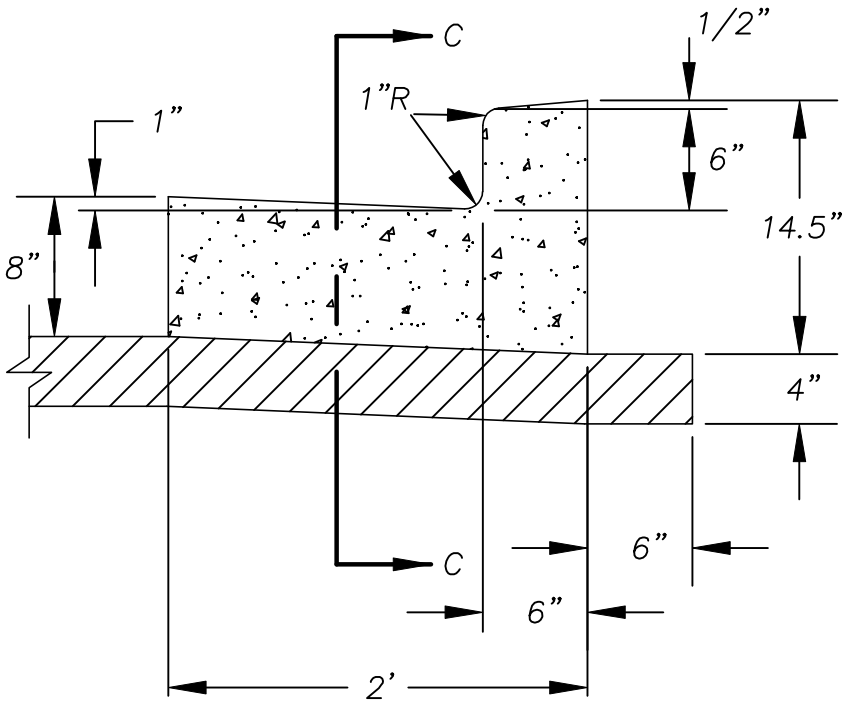

DETAIL

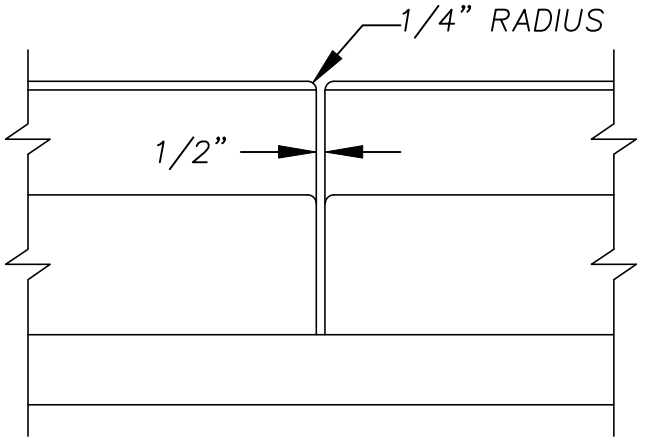

TYPICAL EXPANSION JOINT

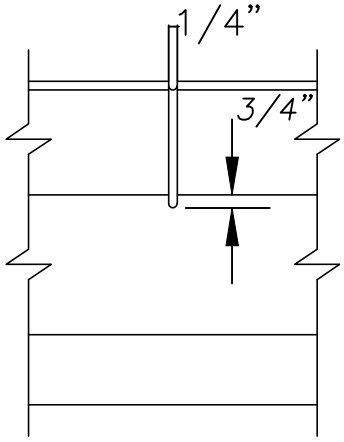

TYPICAL CONTRACTION JOINT

SECTION C-C

PREFORMED 1/2" EXPANSION JOINTS SHALL BE EQUALLY SPACED @ MAX. 50' CENTERS WITH 1/4" CONTRACTION JOINTS EQUALLY SPACED @ 6' MAX. CENTERS BETWEEN EXPANSION JOINTS.

DRAWING TITLE	SCALE	DRAWING NO.	REV.
TYPICAL CURB AND GUTTER DETAIL	N.T.S.	A6.4	

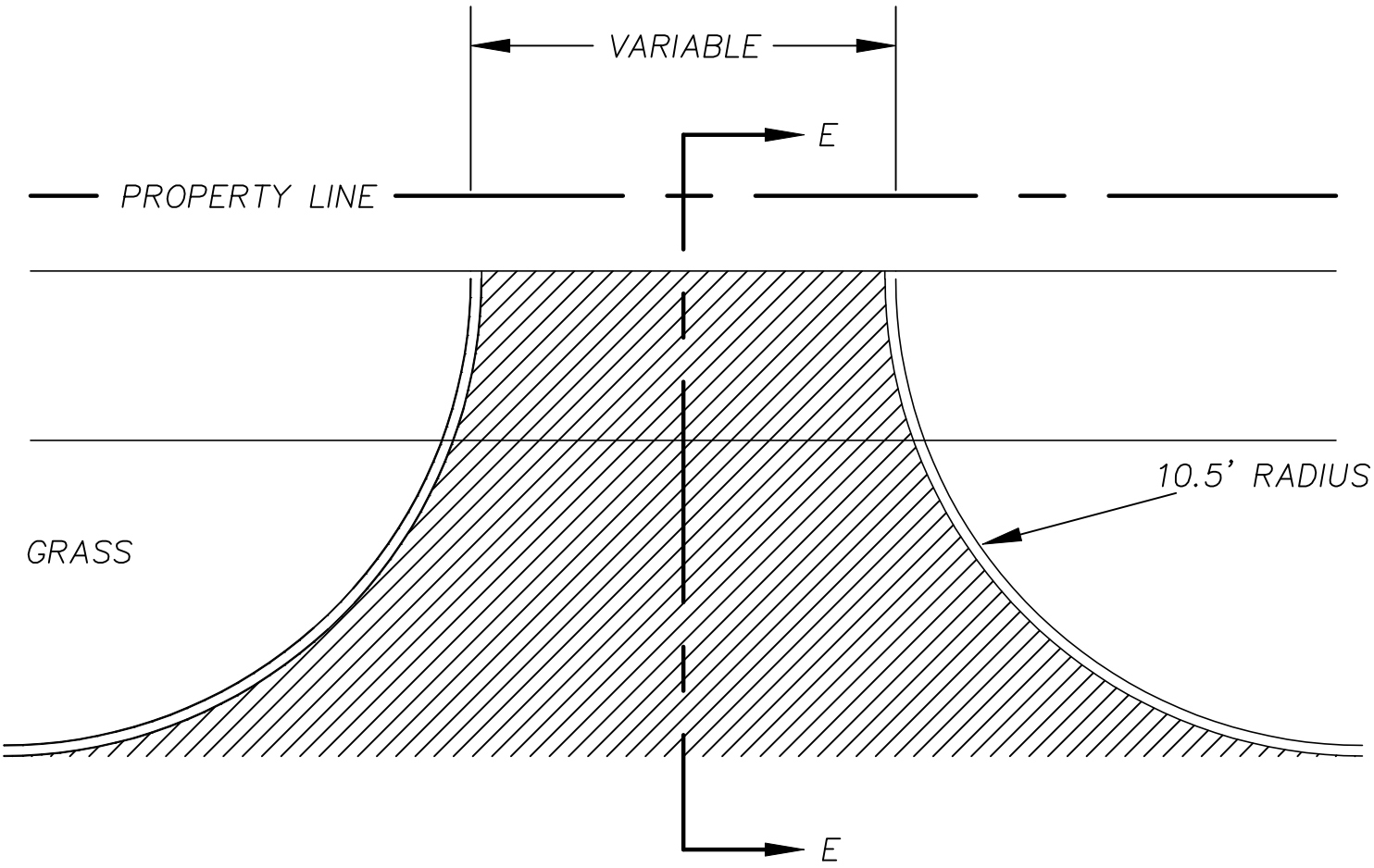

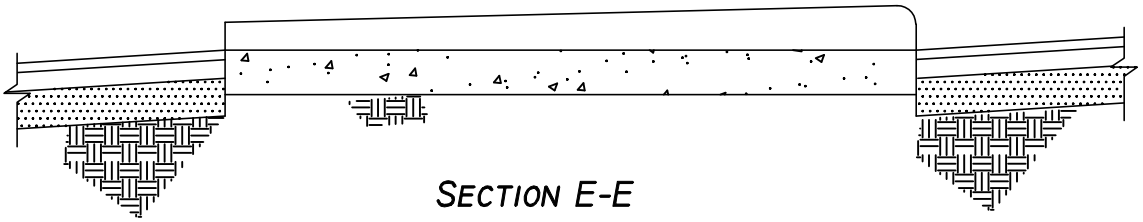

SECTION E-E

DRAWING TITLE	SCALE	DRAWING NO.	REV.
DROP HEADER AT ALLEY ENTRANCE	N.T.S.	A6.5	

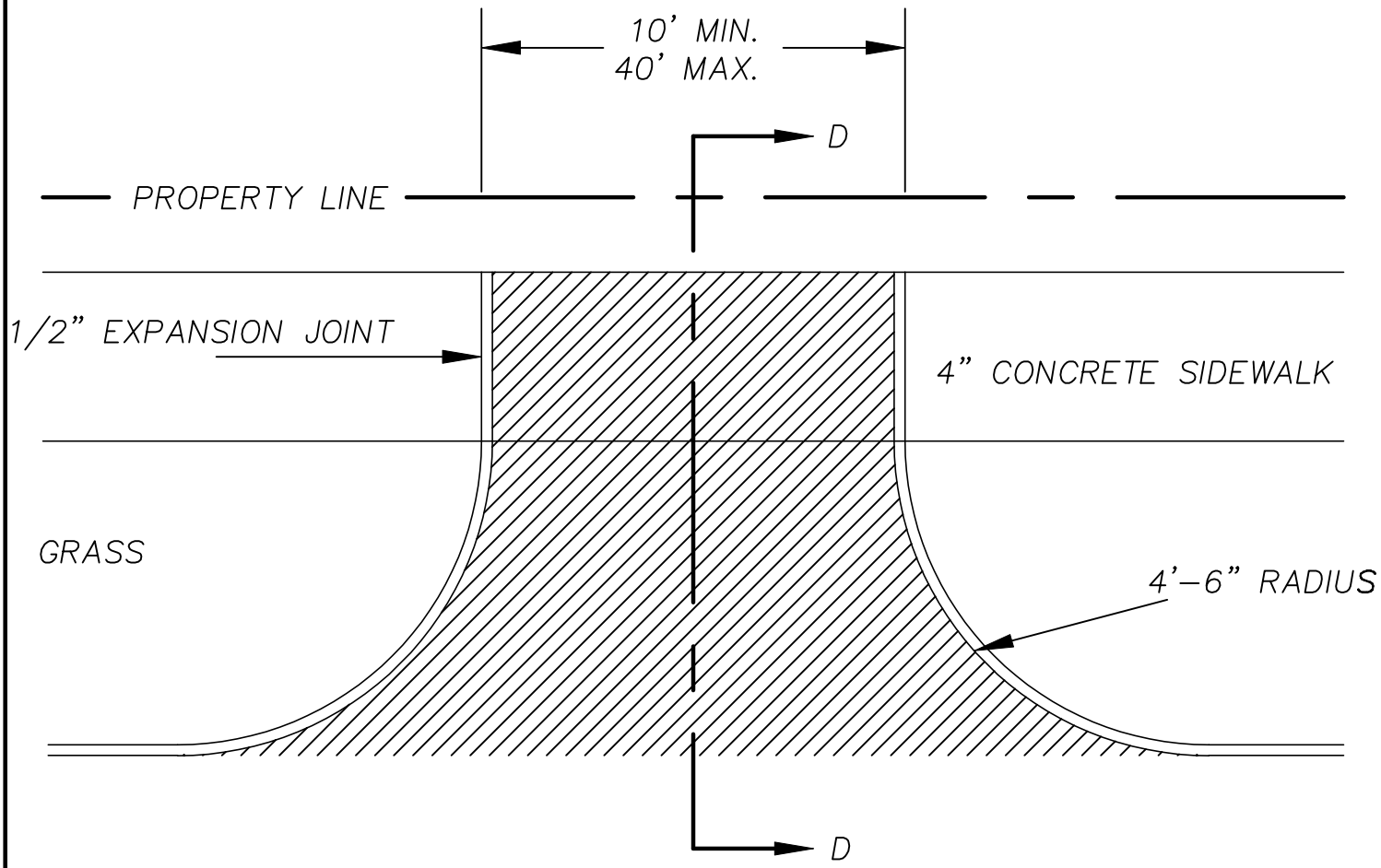

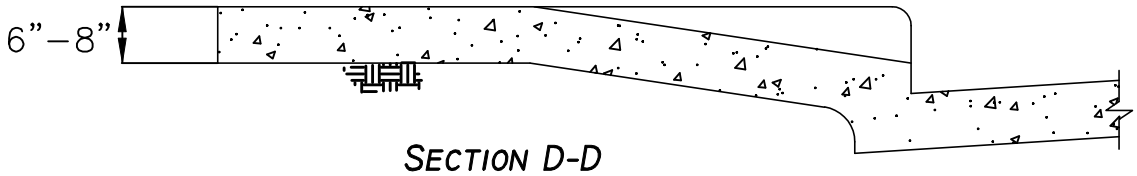

SECTION D-D

DRAWING TITLE	SCALE	DRAWING NO.	REV.
TYPICAL DRIVEWAY ENTRANCE	N.T.S.	A6.6	

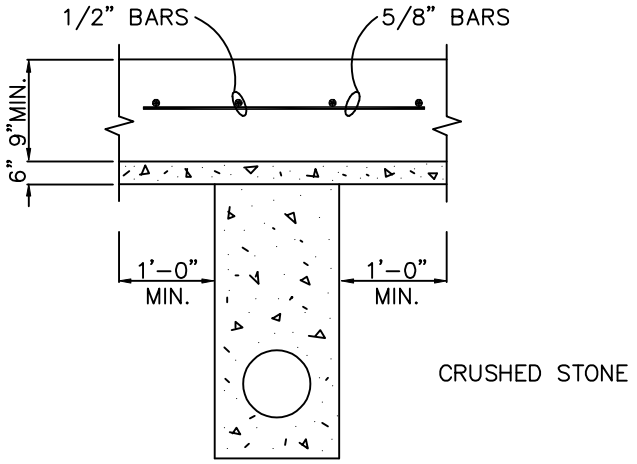

CONCRETE PAVEMENT

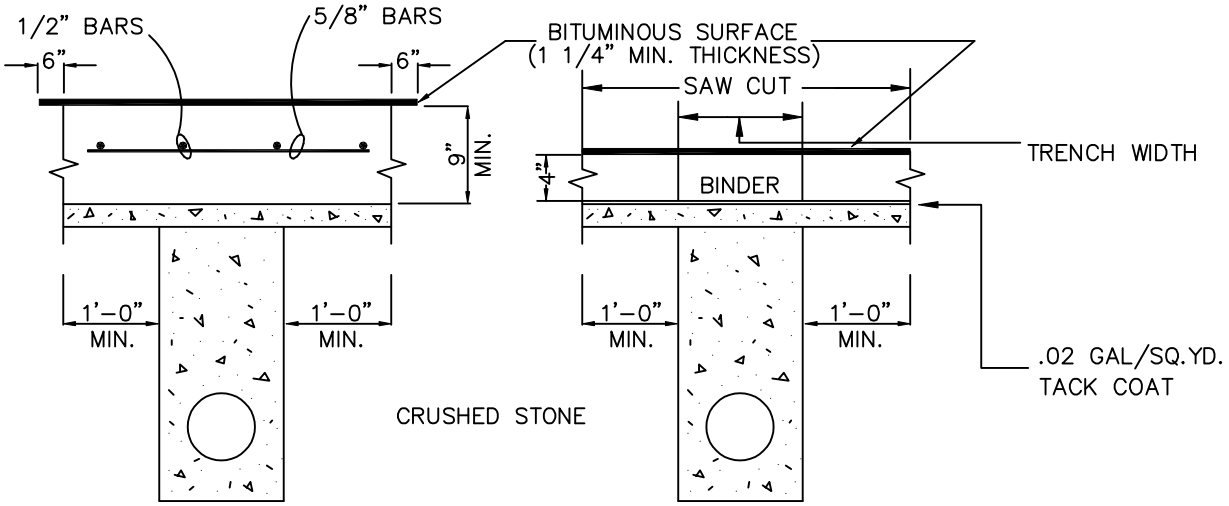

BITUMINOUS SURFACE CONCRETE BASE

BITUMINOUS PAVEMENT

1. ONE-HALF OF THE TRAVELED PORTION OF THE PAVEMENT SHALL REMAIN OPEN TO TRAFFIC AT ALL TIMES.
2. EXISTING PAVEMENTS, BASES, CURBS AND GUTTERS AND SIDEWALKS SHALL BE CUT AND BROUGHT TO A NEAT LINE BY MECHANICALLY SAWING OR BY USE OF AN AIR HAMMER. EXPANSION JOINTS REMOVED SHALL BE REPLACED.
3. ALL UTILITY CUTS IN A ROADWAY SHALL BE SAW CUT AND BACKFILLED WITH MINERAL AGGREGATE BASE COMMONLY REFERRED TO AS PUG MILL. THE BACKFILLING SHALL BE IN LIFTS WITH SUFFICIENT COMPACTION TO PASS 83% OF SOLID ROCK AS DETERMINED BY ASSHTO-T85 (APPROXIMATELY 140 P.C.F.)
4. MATERIALS AND WORKMANSHIP SHALL COMPLY WITH "STANDARD SPECIFICATIONS FOR ROAD AND BRIDGE CONSTRUCTION" ISSUED BY TDOT. ALL WORK IS SUBJECT TO INSPECTION AND APPROVAL BY THE CITY OF KINGSPORT ENGINEERING DEPT.
5. TRENCHES UNDER ROADWAYS SHALL BE BACKFILLED TO THE BASE OF THE PAVEMENT OR A MINIMUM OF 4" BELOW FINISHED GRADE, WHICHEVER IS GREATER, WITH CRUSHED STONE. PAVEMENT SHALL BE REMOVED FOR A MINIMUM OF ONE-FOOT ON EACH SIDE OF THE TRENCH. THE DEPTH OF THE PATCH SHALL BE THE DEPTH OF THE EXISTING PAVEMENT OR 4 INCHES, WHICHEVER IS GREATER. THE PATCH SHALL BE FINISHED SO AS NOT TO LEAVE A BUMP OR DIP IN THE FINISH GRADE. PAVEMENT SHALL BE REPLACED IN KIND AS SHOWN OR AS DIRECTED BY THE CITY OF KINGSPORT ENGINEERING DEPT.

DRAWING TITLE	SCALE	DRAWING NO.	REV.
OPEN CUT TRENCHING, BACKFILLING, & REPLACEMENT	N.T.S.	A6.7	

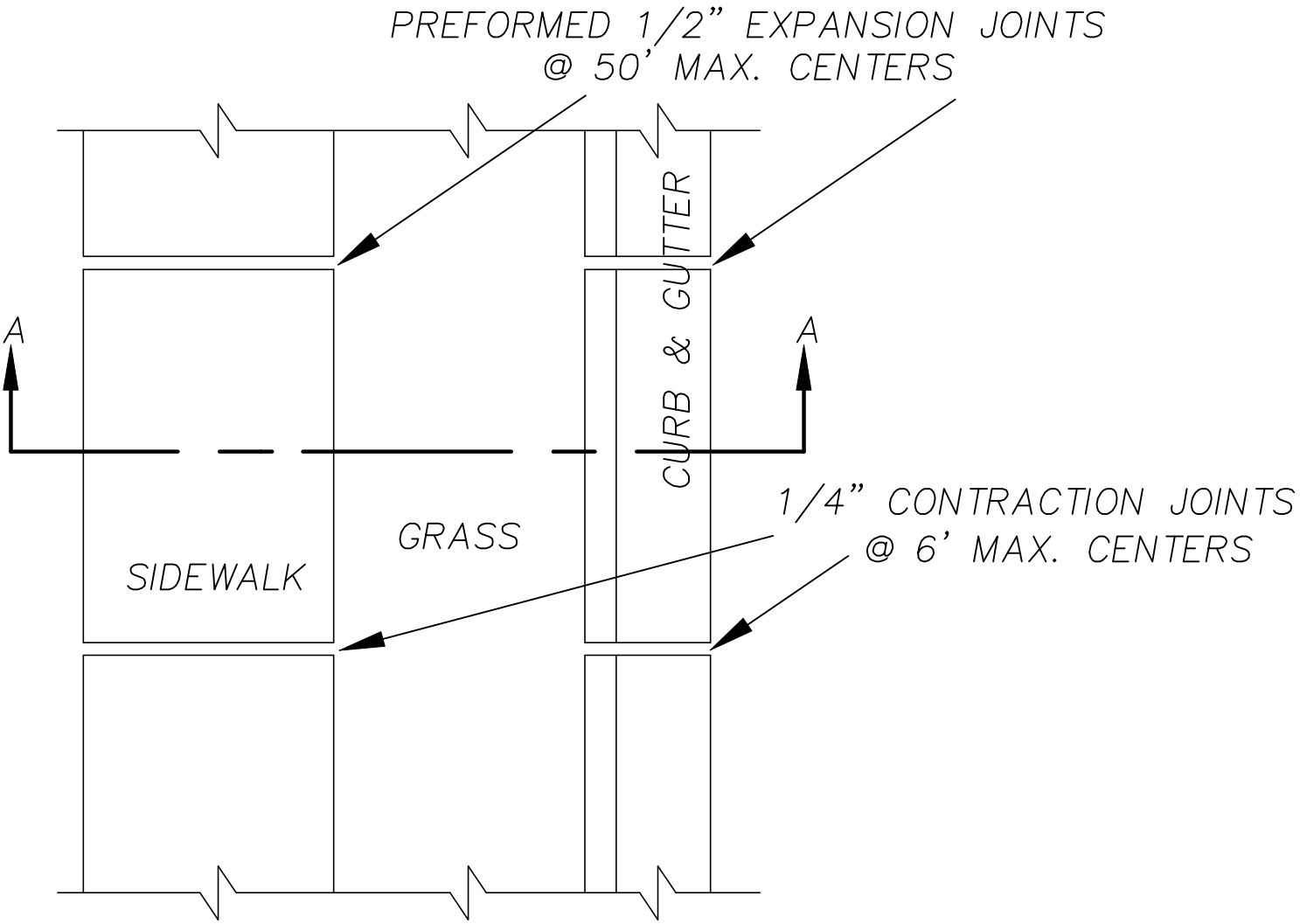

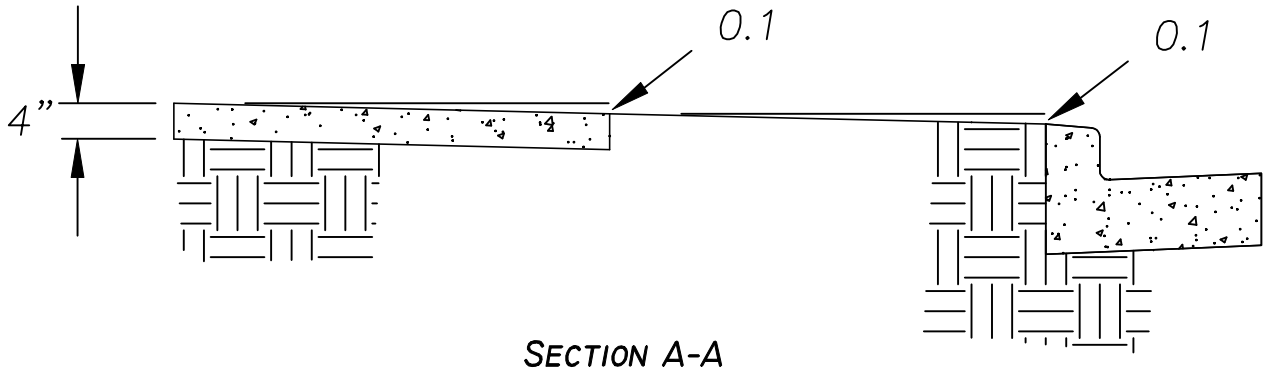

SECTION A-A

DRAWING TITLE	SCALE	DRAWING NO.	REV.
TYPICAL SIDEWALK PLAN 'A'	N.T.S.	A7.1	

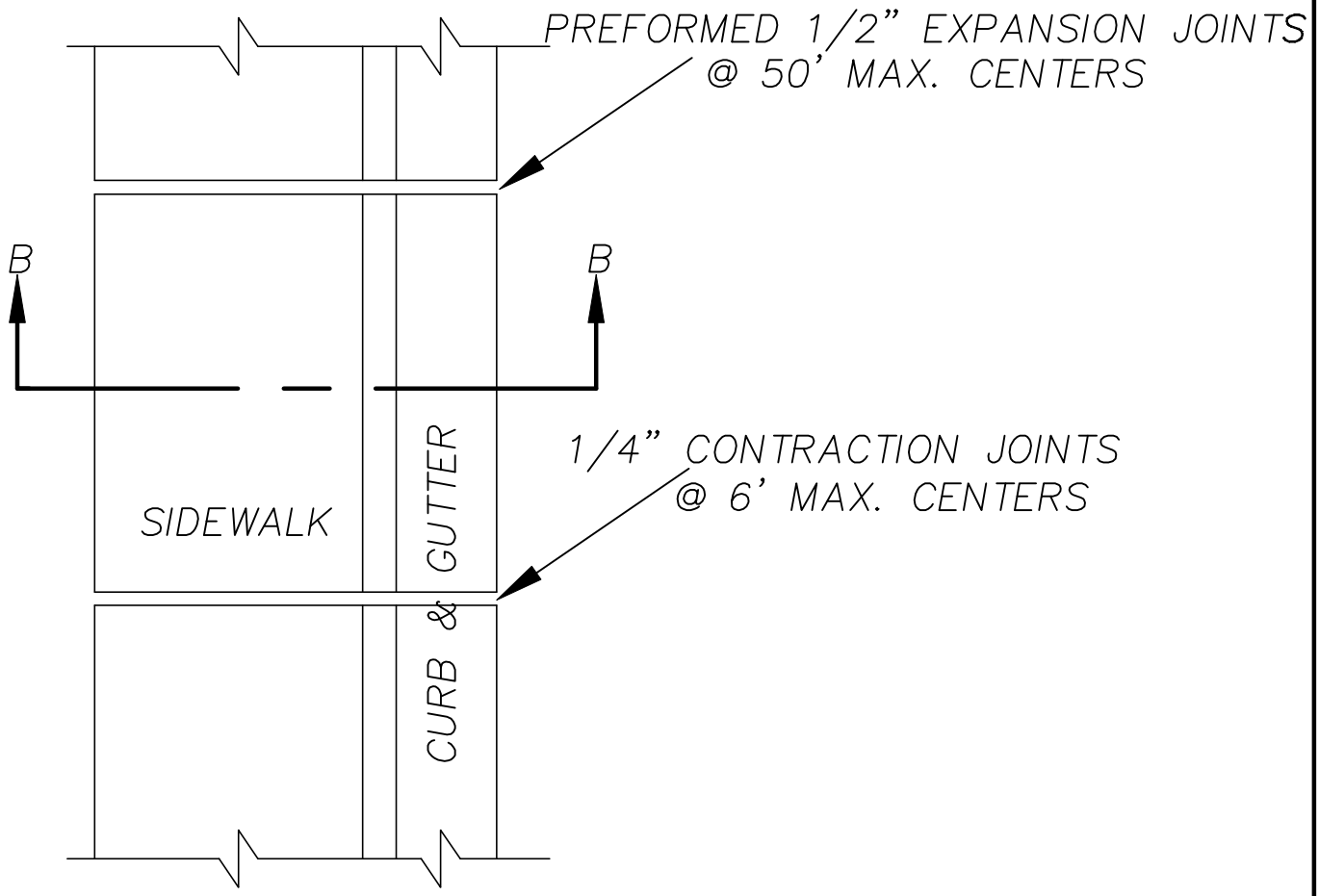

SECTION B-B

DRAWING TITLE	SCALE	DRAWING NO.	REV.
TYPICAL SIDEWALK PLAN 'B'	N.T.S.	A7.2	

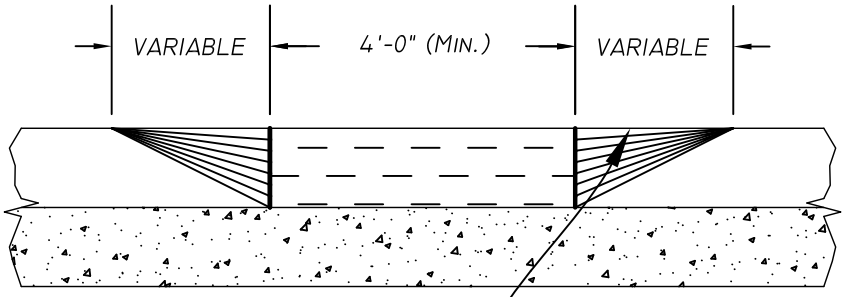

SLOPE VARIES UNIFORMLY TO
10:1 (MAXIMUM), OR
12:1 (DESIRABLE)

SECTION B-B

IF DISTANCE FROM BACK OF
RAMP TO BACK OF
SIDEWALK IS LESS THAN 4'-0"
MAXIMUM SLOPE IS 12:1

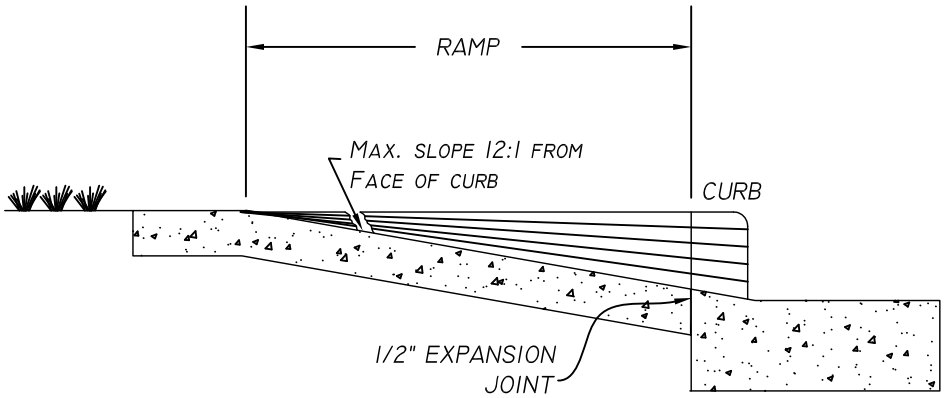

SECTION A-A

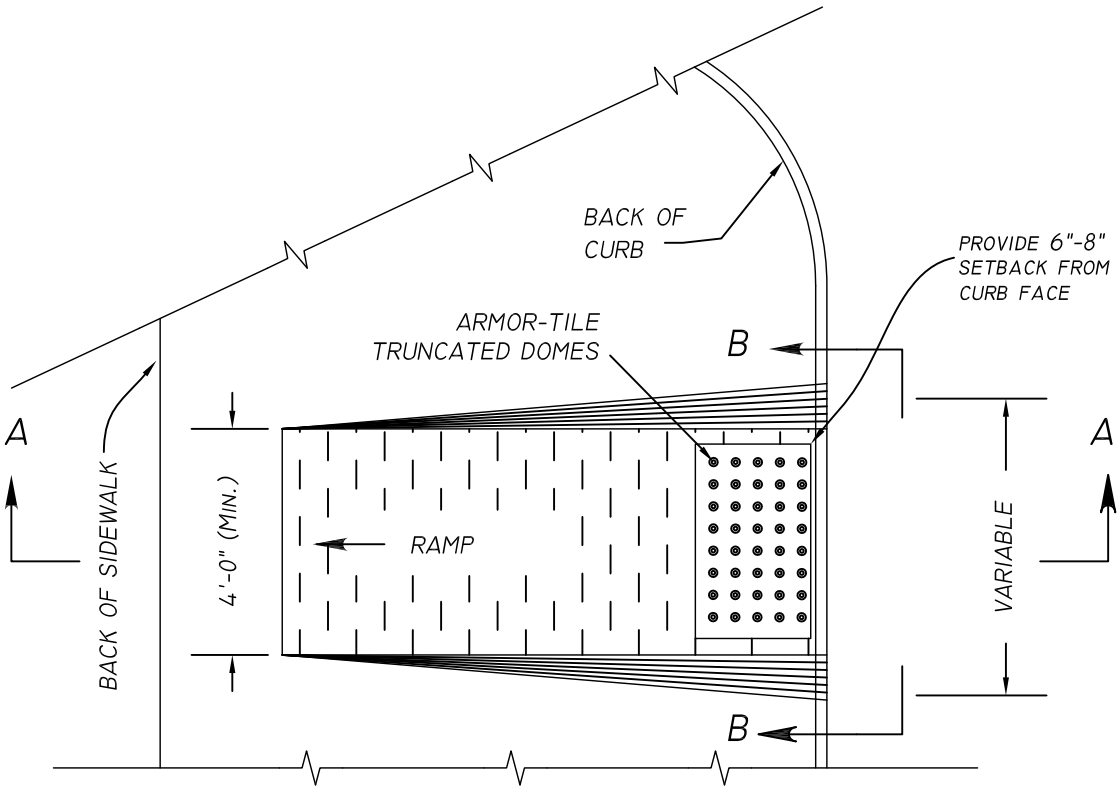

DRAWING TITLE	SCALE	DRAWING NO.	REV.
ADA COMPLIANT RAMP	N.T.S.	A7.3	1

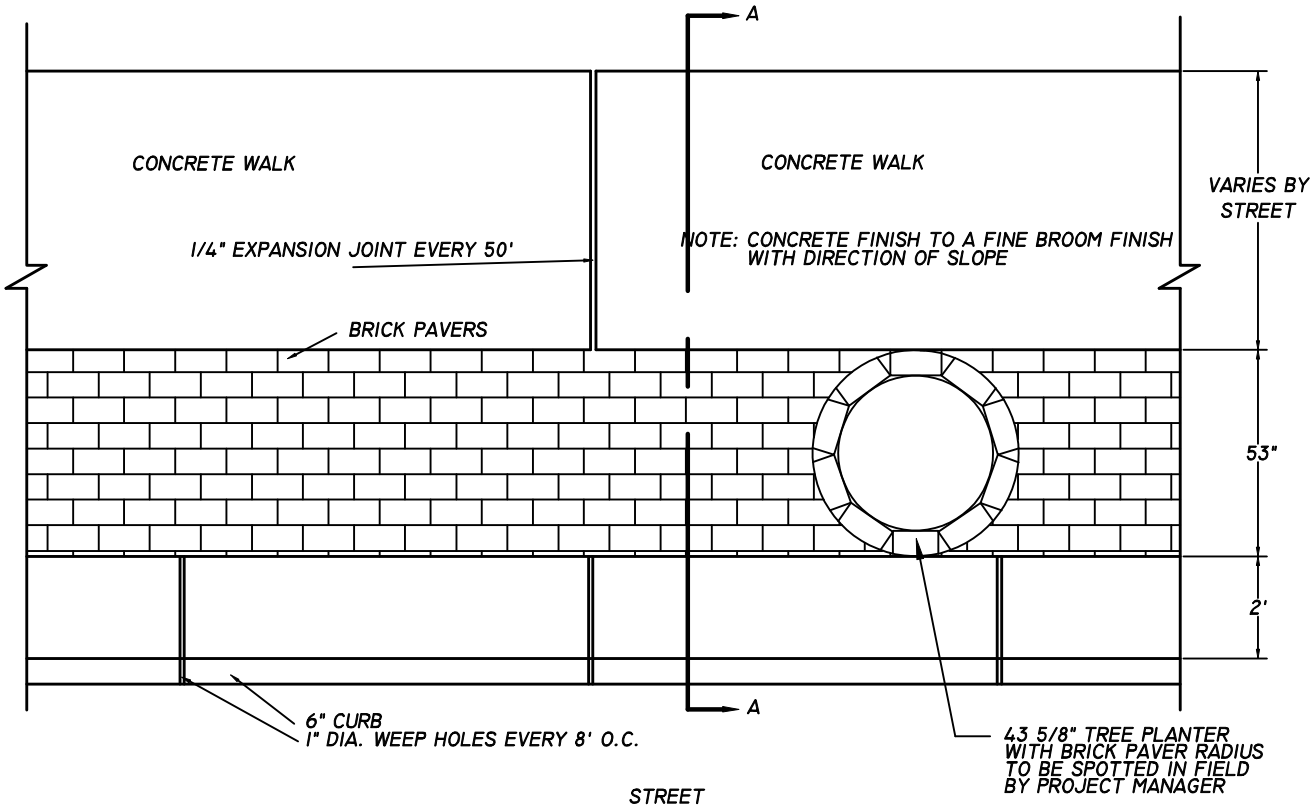

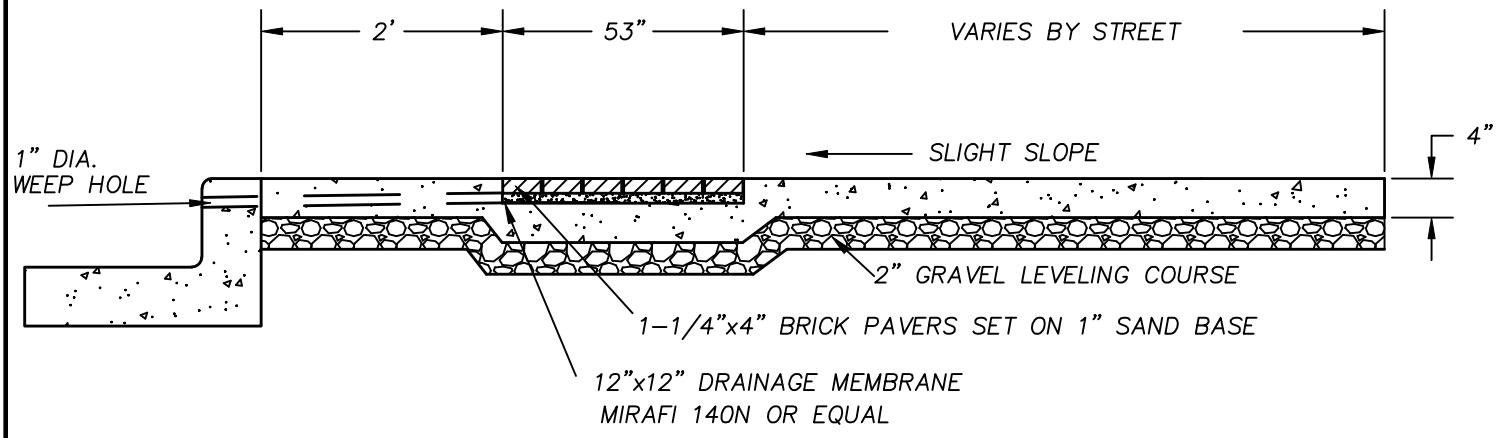

NOTE: IF CURB IS DAMAGED, REPLACE BY MAKING CONTINUOUS POUR WITH SIDEWALK

SECTION A-A

DRAWING TITLE	SCALE	DRAWING NO.	REV.
SIDEWALK PLAN 'A' WITH BRICK PAVERS	N.T.S.	A7.4	

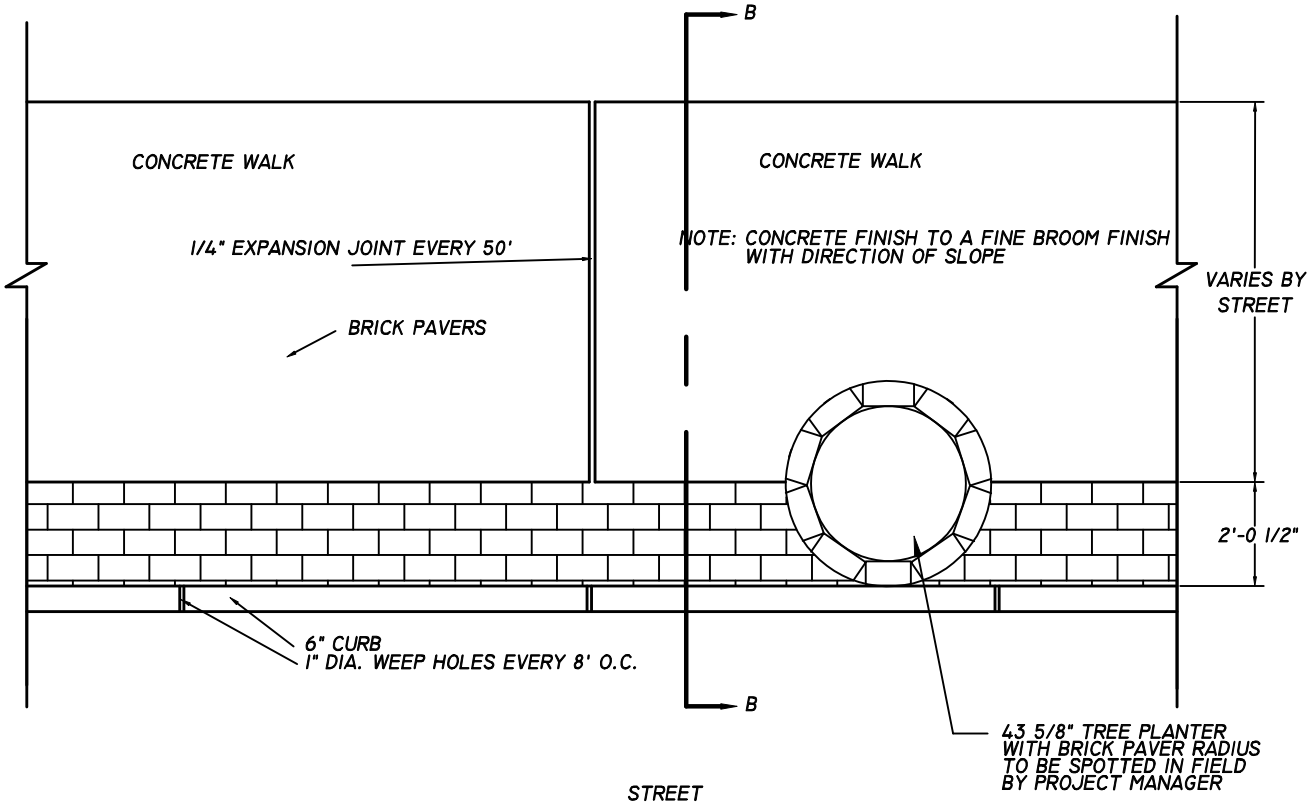

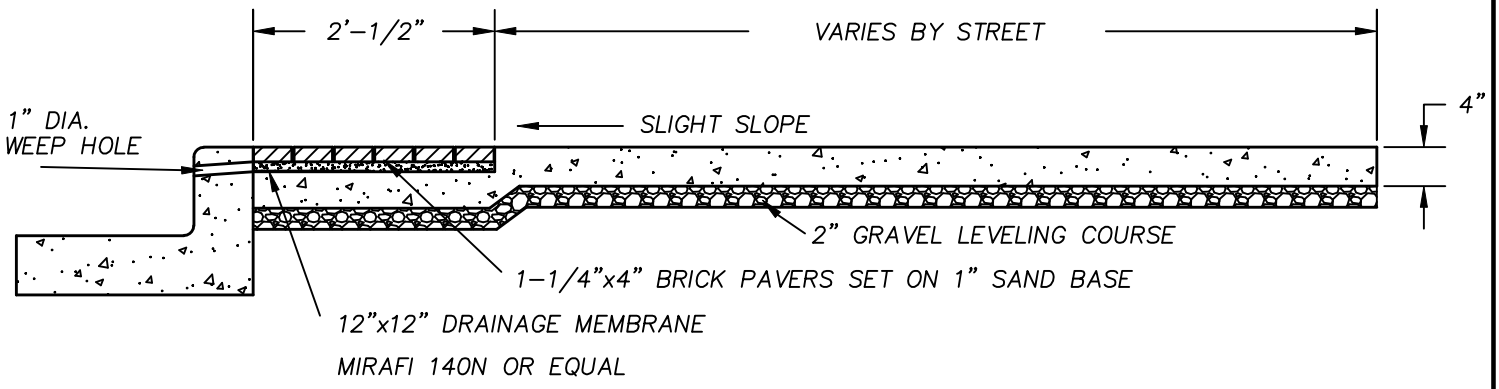

NOTE: IF CURB IS DAMAGED, REPLACE BY MAKING CONTINUOUS POUR WITH SIDEWALK

SECTION B-B

DRAWING TITLE	SCALE	DRAWING NO.	REV.
SIDEWALK PLAN 'B' WITH BRICK PAVERS	N.T.S.	A7.5	

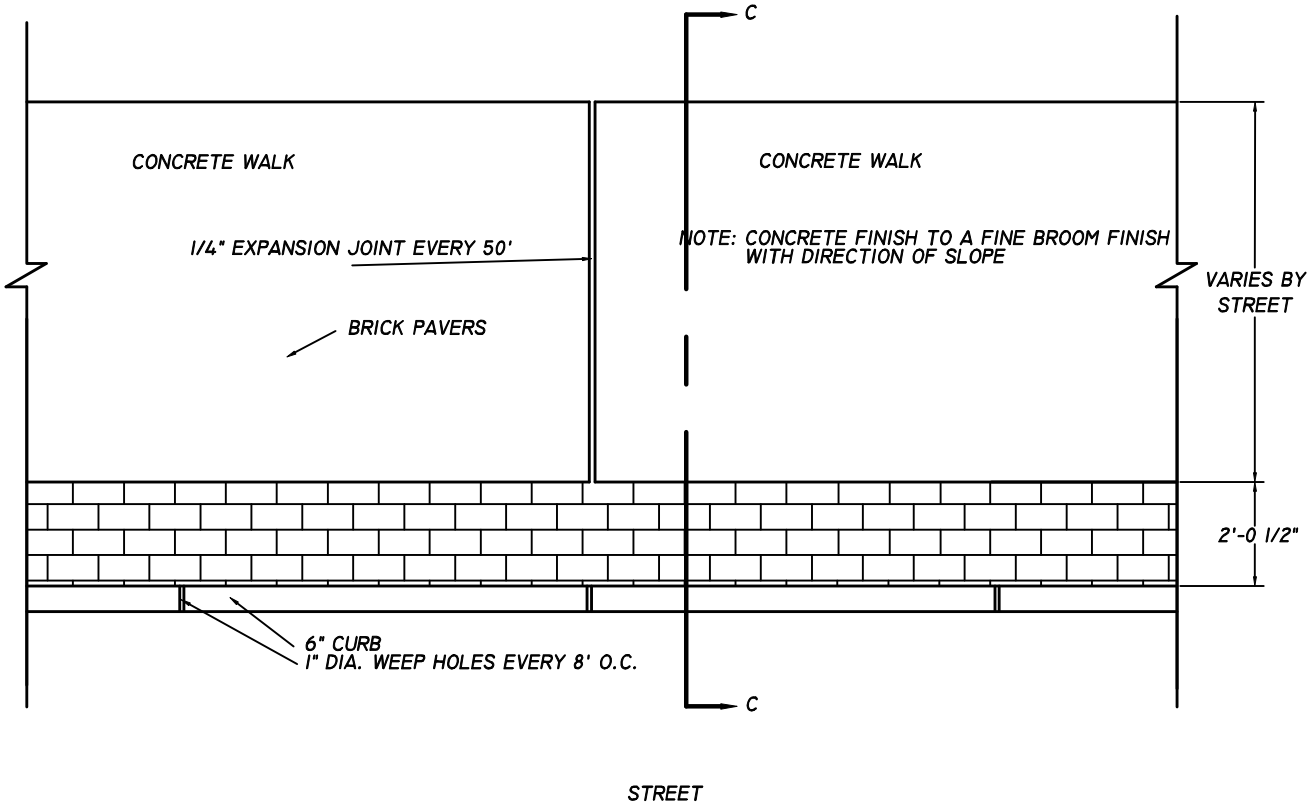

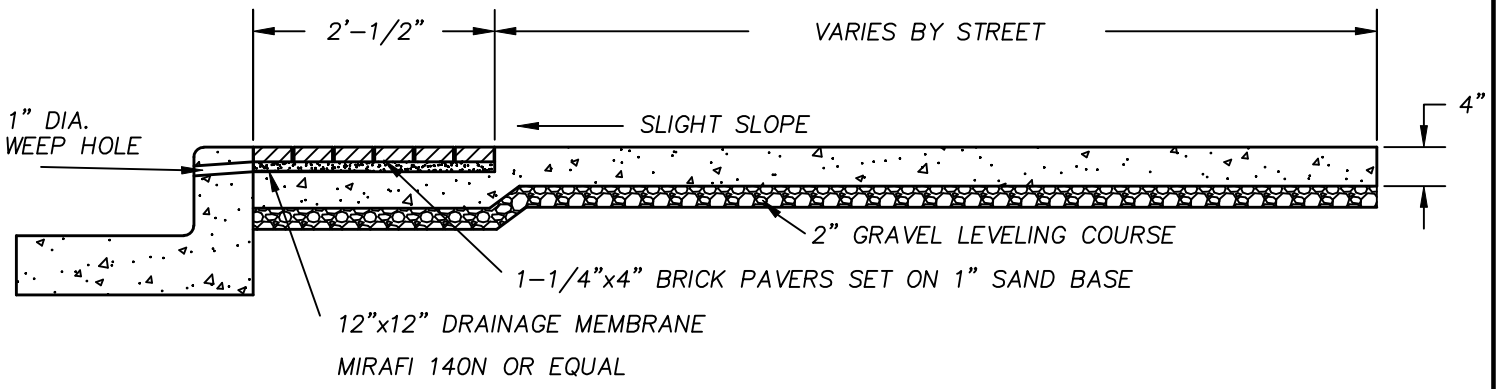

NOTE: IF CURB IS DAMAGED, REPLACE BY MAKING CONTINUOUS POUR WITH SIDEWALK

SECTION C-C

DRAWING TITLE	SCALE	DRAWING NO.	REV.
SIDEWALK PLAN 'C' WITH BRICK PAVERS	N.T.S.	A7.6	